B

IMPROVEMENT

OF

NEW YORK HARBOR.

COMPLIMENTS OF

JOSEPH EDWARDS.

TRANSPORTATION LIBRARY

PROPERTY OF
University of Michigan Libraries
1817
ARTES SCIENTIA VERITAS

E. L. Cooley.
Jan 1894

IMPROVEMENT

OF

NEW YORK HARBOR,

ESTATE OF E. L. COOLEY

1885 TO 1891.

COMPLIMENTS OF

JOSEPH EDWARDS.

NEW YORK,

1893.

TRANSPORTATION LIBRARY

Transportation
Library
TC
225
.N7
E26

Entered according to Act of Congress, in the year 1893, in the office of the Librarian of Congress, at Washington, by

JOSEPH EDWARDS.

WYNKOOP & HALLENBECK, PRINTERS,
441-447 Pearl St., New York.

Transport.

ME 1-5-81-1 ©

ENGINEER OFFICE, U. S. ARMY.

Room F 7, Army Building, 39 Whitehall Street,

NEW YORK, N. Y., May 3, 1893.

MR. JOSEPH EDWARDS,

President, The Joseph Edwards Dredging Co.,

16 Exchange Place, New York City.

SIR—I have the honor to state, in answer to your inquiry, that the United States made, during the four years beginning April, 1887, and terminating February, 1891, six contracts with The Joseph Edwards Dredging Company, New York City, for the improvement, by hydraulic dredging, of the southern entrance to New York Harbor, extending from the sea face of the bar in Gedney Channel westward and northward along the Main Ship Channel to and beyond the northern entrance to the Swash Channel, Lower Bay.

The contracts were successfully and satisfactorily executed by the use of "Edwards' Cataract Pumps," installed in steamers, and the total quantity of material excavated in this way by The Joseph Edwards Dredging Company was 4,300,000 cubic yards.

Very truly yours,

G. L. GILLESPIE,

Lieut.-Col., Corps of Engineers.

BECAUSE of having designed the plant with which the Improvement of New York Harbor has been successfully accomplished, as well as having had the general management of the same and the execution of the work so far as done by the Joseph Edwards Dredging Company, I am receiving various inquiries relating thereto, from engineers and others, who are contemplating similar improvements elsewhere; for which reason I have deemed it advisable, as a means of facilitating response to such inquiries, to prepare the following account of this Improvement, including the accompanying description and illustrations of the means employed.

JOSEPH EDWARDS.

PREFACE.

The following account of the Improvement of New York Harbor refers briefly to the necessity which had arisen for deeper water in the Lower Bay; the location and character of its channels, and their condition before the undertaking was commenced and at its completion; the projects recommended by Government Engineers to improve them; why dredging was finally adopted; nature and magnitude of the work; difficulties encountered and results attained; Government appropriations made for, and estimated and actual cost of the Improvement; means and method of executing the work, and evidences of its permanency; by whom the work was successfully performed, and the various prices per cubic yard paid therefor; together with a brief description of the plant employed; *and why the Swash Channel should be improved.*

CONTENTS.

	PAGE
PREFACE	5
IMPORTANCE OF THE IMPROVEMENT	8
CHANNELS OF NEW YORK HARBOR	9
MAP OF THE LOWER BAY SHOWING THE CHANNELS	10
CONDITION OF THE CHANNELS BEFORE THE IMPROVEMENT WAS MADE	10
FIRST ACTION TAKEN BY THE GOVERNMENT TO IMPROVE THEM	11
PROJECTS PROPOSED BY GOVERNMENT ENGINEERS	12
PROJECT AND RECOMMENDATION OF COL. G. L. GILLESPIE	12
PROJECT AND RECOMMENDATION OF THE BOARD OF ENGINEERS	15
PERMANENCY OF THE IMPROVEMENT TESTED AS THE WORK PROGRESSED	16
GOVERNMENT APPROPRIATIONS FOR THE IMPROVEMENT	18
ITS ESTIMATED COST BY CONTRACTION SUPPLEMENTED BY DREDGING	18
WHAT THE IMPROVEMENT HAS ACTUALLY COST	19
SAVING TO THE GOVERNMENT BY MEANS OF DREDGING	20
DIFFERENCE BETWEEN AMOUNT OF MATERIAL CONTRACTORS WERE PAID FOR REMOVING AND AMOUNT OF CHANNEL SPACE OBTAINED	20
BY WHOM THE WORK WAS DONE	21
AVERAGE PRICES PAID DIFFERENT CONTRACTORS, AND GENERAL AVERAGE PRICE	21
TABULAR STATEMENT OF CONTRACTS TAKEN AND WORK DONE BY THE JOSEPH EDWARDS DREDGING CO	22
TABULAR STATEMENT OF CONTRACTS TAKEN AND WORK DONE BY OTHER CONTRACTORS	22
TABULAR STATEMENT EMBRACING CONTRACTS, WORK DONE, ETC., OF ALL CONTRACTORS	23
TIME TAKEN TO EXECUTE THE IMPROVEMENT	24
NATURE OF THE MATERIAL, AND AMOUNT HANDLED COMPARED WITH AMOUNTS CONTRACTORS WERE PAID FOR REMOVING.	24

PAGE

MAGNITUDE OF THE UNDERTAKING 25
HOW THE WORK WAS DONE, OR THE SYSTEM OF DREDGING EMPLOYED 25
RELATING TO DIFFICULTIES ENCOUNTERED 26
GOVERNMENT ENGINEERS IN CHARGE 29
HARMONIUS RELATIONS BETWEEN ENGINEERS AND CONTRACTORS .. 29
THE PUMPS THE VITAL PARTS OF THE PLANT 30
SPECIAL EVIDENCE OF THE CAPACITY OF THE EDWARDS CATARACT PUMP 30
ADVANTAGES OF PUMP-DREDGING OVER OTHER SYSTEMS 34
OUTLINE DESCRIPTION OF THE PLANT 34
METHOD OF WORKING THE DREDGING STEAMERS 38
SPECIAL FEATURES OF THE PUMP 40
SPECIAL FEATURES OF THE DRAGS AND SUCTION PIPES, AND THEIR CONNECTIONS WITH THE PUMPS AND SHIPS 47
REASONS WHY THE SWASH CHANNEL OF NEW YORK HARBOR SHOULD BE IMPROVED 54
FACILITY WITH WHICH IT COULD BE IMPROVED 54
CERTAINTY OF THE PERMANENCY OF ITS IMPROVEMENT ... 54
ADVANTAGES OF ITS POSITION AND DIRECTION 57
ITS ECONOMICAL ADVANTAGES OVER THE MAIN SHIP CHANNEL 58
NECESSITY OF ITS IMPROVEMENT 58
WHY THE MAIN SHIP CHANNEL HAS BEEN HERETOFORE EMPLOYED 59
WHY THE SWASH CHANNEL WAS NOT IMPROVED 60
EXPLANATION OF PLATES 62

IMPORTANCE OF THE IMPROVEMENT.

When it is considered that the City of New York, with its adjacent cities, is soon to become, if it is not already the greatest commercial centre of the world, and that its social as well as business relations with all nations is rapidly increasing, it is evident that nothing can be of more importance to the interest, not only of the City of New York, but of the whole country, than an ample water-way between its docks and the ocean, of such depth and width that the largest ships of these and future times may pass into and out of its harbor, at all states of the tide, as safely and freely as ferry boats are run on its surrounding bays and rivers.

Referring to the importance of the Improvement, Col. McFarland, in his report for 1887, says:

"At this port two-thirds of the merchandise imported into the United States are received, and two-thirds of the import duties are collected. From this port are sent out one-half of the domestic products of the country which are exported, and here one-half of the foreign tonnage trading with the United States enters. Three-quarters of the passengers travelling between the United States and foreign countries come and go by way of New York, and three-fifths of all emigration land at Castle Garden.

"The increase of the population of this great centre of life and industry has been very rapid for the last forty years. From 1840 to 1850 the increase, as shown by the census returns, was 86 per cent.; from 1850 to 1860, 68 per cent.; from 1860 to 1870, 29 per cent.; from 1870 to 1880, 34 per cent. At this rate in fifty years more the population of the City of New York, with its suburbs, will become not less than 8,000,000."

Relating to the importance of the Improvement, Col. Gillespie accompanied his report for 1885 with Commercial Statistics, obtained by him from the Collector of the Port. The report says:

"The following is a copy of letter received from the collector of customs, port of New York, furnishing statistics with reference to the commerce of the harbor.

"CUSTOM HOUSE, NEW YORK CITY,
COLLECTOR'S OFFICE, July 25, 1885.

"SIR:—As requested in your favor of the 3d instant, it gives me pleasure to furnish the statistical information you desire for the fiscal year ending June 30, 1885:

Total receipts from all sources	$126,183,873.57
Value of imports	380,075,748.00
Value of imports for interior ports	16,833,562.00
Value of imports in transit	16,052,183.00
Value of domestic exports	334,729,775.00
Value of foreign exports	9,796,534.00
Value of merchandise in bond June 30	21,485,083.00
Value of specie (imports)	6,314,264.00
Value of specie (exports)	14,656,718.00
	Tonnage.
Foreign vessels entered, 4,130	4,729,283
Foreign vessels cleared, 4,031	4,670,360
American vessels from foreign ports, 1,691	930,444
American vessels for foreign ports, 1,273	770,105
Coastwise vessels entered, 1,913	1,761,348
Coastwise vessels cleared, 3,076	2,280,063

Very respectfully,

E. S. HEDDEN, *Collector.*

LIEUT. COL. G. L. GILLESPIE,
U. S. Engineer Office."

Channels of New York Harbor.

To afford a clear understanding, and facilitate the explanation of the character and relative position of the several channels of New York Harbor below the Narrows, and the work performed on them, careful inspection should be made of the following Map, which was prepared from a special survey made by Col. G. L. Gillespie, Corps of U. S. Engineers, by direction of the Government (in 1884), with reference to this improvement—the figures, showing the soundings, having been changed to correspond with the depth and width of the channels as now improved, and the location of the work being designated by checked lines. (The Swash Channel is shown by the blue tint.)

To describe the channels and point out their location, as well as to

give a general description of the Lower Bay, we quote from Col. Gillespie's Report of 1890, as follows:

"The Lower Bay is a large tidal basin, with an area of about 100 square miles.

"The distance by the Main Ship Channel, from the Battery at New York to 30 foot soundings outside of the bar of Gedney's Channel is 22 miles, and by the Swash Channel it is 18 miles, or from the Narrows 15 and 11 miles respectively.

"From the northeast around by the east to the southeast the Lower Bay is open to the full sweep of the Atlantic Ocean.

"From the Narrows to the northern point of Sandy Hook is about 9 miles, but the shortest distance across the bay, from the point of the Hook to Coney Island, is 7 miles.

"Below the Narrows there is one main channel, known as the Main Ship Channel, running southward to a point about 1 mile west of the upper end of Sandy Hook; thence turning northward and eastward for 4 miles to the head of Gedney's Channel, and thence through Gedney's Channel east to deep water of the Ocean.

"Gedney's Channel is the main channel across the Ocean Bar, lying at the entrance to New York Harbor, about 3 miles outside of Sandy Hook, and east by north from it.

"The Swash Channel is really a cut-off from the Main Ship Channel, leaving it about 6 miles below the Narrows, and joining it again at the Hook, western end of Gedney's Channel.

"Lying northward of the above described channels, and extending eastward, are three other lesser channels, the "Coney Island" (which is used only by local excursion boats and small sailing vessels), the "Fourteen Foot," and the "East Channels"—for location and relative position of which see Map, page 9."

Relating to the depths of water in the Upper Bay, the report states:

"From the Narrows northward to New York City there is no water less than 6 fathoms (36 feet) deep in the main channel."

Condition of the Improved Channels Before the Improvement was Made.

Col. G. L. Gillespie, in his report for 1890, says:

"Before the improvement of the Main Ship Channel into New York Harbor was undertaken by the United States, it was obstructed by four shoals as follows:

Oversized Foldout

"*First.* The outer bar, about 4,000 feet wide, the channel across which is known as Gedney's Channel, where there were depths 23.7 feet in mid-channel and 22.3 feet in the southern half.

"*Second.* The shoal at the mouth of the Swash Channel, about 4,000 feet wide, where the depth was 24.3.

"The channel across this shoal has been named the Bayside Channel.

"*Third.* The shoal northwest of Sandy Hook, about 2,000 feet wide, on which the least depth was 26.2 feet.

"*Fourth.* The shoal in the Main Ship Channel in the Lower Bay, west of Flynn's Knoll, nearly three miles long, on the crest of which the depth was only 23.9 feet in mid-channel, with depth of 22.6 feet within a few hundred feet of the mid-channel range.

"A large proportion of the vast commerce of the port, which is carried on in vessels of great draught, could only cross these channels at, or near, high water."

Referring to the condition of the channels before the improvement was made, Col. McFarland in his report of 1886, says:

"Col. Gillespie, in 1884, reported that the deepest draught vessels that had ever entered New York Harbor was the Spanish frigate *Numancia*, which drew 28 feet 8 inches, but that she had to wait for a spring tide to cross the bar.

"The minimum depth of water in the Main Ship Channel at mean low water in February, 1886, was 23.3 feet, to which must be added 4.8 feet for mean rise of tide, which would give a minimum depth of 28.1 feet at mean high water, or only one-tenth of a foot more than the draught of the largest ocean steamers at present.

"Slack water at Sandy Hook averages about 40 minutes, so that the vessels of deep draught have only 40 minutes in which to cross the bar in Gedney's Channel, and to pass the Knolls, seven miles above it.

"It is common to see vessels passing over the bar with a wake 500 to 1,000 feet long behind them of material churned up from the bottom by their propeller blades.

"Thirty feet at mean low water appears to be the depth which is required to enable the largest ocean steamers to come in with two feet to spare below their bottom."

First Action taken by the Government to Improve New York Harbor.

Though the need of deeper channels in New York Harbor had been yearly and rapidly increasing, and had been frequently agitated by the

Commercial Bodies of New York, and by them the Government from time to time had been solicited to provide increased facilities for entering the port of New York, yet it was not until 1884 that the Government concluded to practically consider the subject.

"Up to July 5, 1884, no money had been appropriated for the improvent of the Lower Bay and its channels, and no work had been done. But on that date, without any preliminary examination, survey or report, an appropriation of $200,000 was made by Congress for deepening Gedney's Channel, New York Harbor."

At this time the Engineer in charge, Col. G. L. Gillespie, "was authorized and directed to make a survey of the lower harbor from the eastern end of Coney Island to Sandy Hook, with a view of determining the most feasible plan of improvement. The survey was begun in August and completed in November, 1884, and transmitted to the Chief of Engineers, December 6, 1884."

Projects Proposed by Government Engineers.

When the improvement of New York Harbor thus came to be practically considered by the Government, in 1884, by appropriating $200,000, directing a survey to be made and calling for a report, the problem then to be solved by its engineers related to the method to be adopted, which, as far as could be determined without experiment, would best attain the desired results. This problem involved several considerations bearing upon whatever plan might be projected:

First. The probability of successfully obtaining the required depth of water.

Second. The probability of permanency of deeper water after the completion of the work.

Third. The relative cost of the different plans.

Project and Recommendation of Col. G. L. Gillespie.

Col. Gillespie accompanied the report of his survey, above mentioned, with various observations relating to what he found to be the condition of the channels as compared with their condition at previous times; velocity of currents, and character of material found in the different channels; and various other important information relating to the proposed improvement; together with his project for improving the channels, and the estimated cost, as will appear from the following extracts from his report for 1885:

"The act of July 5, 1884, makes a specific appropriation for the deepening of Gedney's Channel, and this project, therefore, is limited to that channel.

"The methods usually adopted for deepening a channel are by contraction or by removal of material by steam dredges."

Referring to contraction by constructing a stone dike to spring from Coney Island and extend several miles toward Sandy Hook, and strengthening Sandy Hook, to prevent it being washed away, Col. Gillespie says:

"Before considering such a project, *it would be well to try the experiment of deepening the channels across the bar by dredging*, which has been so successful, by report, at the mouth of the Tyne, and at other ports in England, where the dredged channels have been in the Open Sea, and when improved, have been self-maintaining.

"If the experiment fails here, then the composition and nature of all the shoals should be accurately determined by deep borings; the action of the currents definitely learned, and the method of contraction studied.

"*The project which I submit for present consideration, then, is to open a channel through the shingle shoal lying across the western entrance to Gedney's Channel, between the 30-foot curves, low stage, by dredging;* by any other method provided for the raising of the obstructing material and carrying it elsewhere to an assigned place of deposit, or by any well developed plan of removal by artificial currents.

"The proposed cut will extend along the axis of the channel for an approximate distance of 4,000 feet, will be 1,000 feet wide, and will carry 30 feet at mean low stage.

"The maximum depth of cutting will be $6\frac{5}{10}$ feet, and the amount of material required to be removed will be 700,000 cubic yards measured in place.

"I do not know that the cut, once opened, will be self-maintaining, but the present appropriation being small, it is well enough to experiment with it, and if the experiment is moderately successful, the use of large sums for contraction by stone structures may be avoided, and the annual appropriations for maintenance may be placed at comparatively low figures.

"There is a shoal in the main channel, west of Flynn's Knoll, 2 miles (approximately) wide, with only 25 to $25\frac{5}{10}$ feet deep, mean low water. To deepen the channel there to 30 feet mean low water will require an improvement similar to that in Gedney's Channel; but, as it is inside of the bar, and there is a safe and deep anchorage for vessels near the Hook, the improvement is not so urgent as in the latter channel; still, there are other considerations which make it highly important that this

shoal should be removed simultaneously with the improvement on the bar."

COST OF THE IMPROVEMENT.

"*Gedney's Channel:*

Channel 1,000 feet wide, 30 feet mean low water, 700,000 cubic yards at 50 cents	$350,000
Channel 1,000 feet wide, 28 feet mean low water, 385.000 cubic yards at 50 cents	192,500
Channel 1,500 feet wide, 27 feet mean low water, 367,000 cubic yards at 50 cents	183,500
Channel 1,000 feet wide, 27 feet mean low water, 200,000 cubic yards at 50 cents	100,000
Channel 800 feet wide, 27 feet mean low water, 146,000 cubic yards at 50 cents	73,000

"*Main Channel, West of Flynn's Knoll:*

Channel 1,000 feet wide, 30 feet mean low water, 1,550,000 cubic yards at 40 cents	$620,000
Channel 1,000 feet wide, 28 feet mean low water, 794,000 cubic yards at 40 cents	317,600
Channel 1,500 feet wide, 27 feet mean low water, 738,000 cubic yards at 40 cents	295,200
Channel 1,000 feet wide, 27 feet mean low water, 467,000 cubic yards at 40 cents	186,800
Channel 800 feet wide, 27 feet mean low water, 373,000 cubic yards at 40 cents	149,200

RECAPITULATION.

Improving Gedney's Channel for 30 feet, mean low water	$350,000
Improving main Channel for 30 feet, mean low water	620,000
Total	970,000

"No allowance has been made in the above computations for irregularities in cutting, or for increase in bulk should the material be measured in scows. This increase would amount probably to 30 per cent. for the 28 and 30 feet depths, and to about 50 per cent. for the 27 feet depths.

"The least width for a conveniently navigable channel, where cross-currents exist, for the largest class of vessels, is 800 to 1,000 feet.

"I recommend that the available funds be applied toward the opening of the 30 foot channel, by dredging, for a width dependent upon the cost of removal of material, and the work be done by contract after soliciting sealed proposals by public advertisement in the usual way.

"I also recommend that Congress be asked to make an additional appropriation of $770,000 this session to complete the improvement proposed

both for Gedney's Channel and for the main channel on the inside, or for application toward the commencement of permanent works of construction, if such works be found necessary.

"It is my belief that if before any work is done a sufficient time be given to the contractors to prepare an extensive plant, suitable for making the improvement rapidly, the money appropriated will be most judiciously and advantageously expended, and that it may reasonably be expected that the channel will, after the proposed improvement has been effected, be self-sustaining for many years."

It seems reasonable to suppose that the above described project, suggested and recommended by Col. Gillespie, had the effect to determine the method of improving New York Harbor; and though it was at first only experimentally adopted, yet by its final and complete execution it has resulted in preventing the outlay of a large sum for contraction-works, and avoiding restrictions to the navigation of the Lower Bay that might have resulted therefrom, as well as consummating the desired results.

Project and Recommendation of the Board of Engineers.

Col. Gillespie's project and recommendation was submitted, by the Chief of Engineers, to the Board of Engineers, December 10, 1884. The Board submitted its report thereon December 23, 1884, which is too extended to be quoted here, except its conclusions, which, briefly stated, were:—

"The Board recommends as a general plan for improving the entrance to New York Harbor, so as to give 30 feet from New York to the ocean, the construction of a stone dike running about S. S. E. from Coney Island to such distance as shall be found necessary, and probably not less than four miles; the protection of the head of Sandy Hook; and the dredging of a 30 foot channel from the deep water near Sandy Hook to deep water below the Narrows; also the immediate dredging of the channel 1,000 feet wide and 28 feet deep through the shoal west of Flynn's Knoll, as soon as Congress shall furnish the funds; also that the existing appropriation be applied to dredging Gedney's Channel to a depth of 28 feet."

As the first appropriation (the $200,000 granted July 5, 1884) was made for dredging in Gedney's Channel, this money could not be applied to the general improvement in any other way; therefore, dredging on this channel was commenced before the project for contraction was either adopted or abandoned. And before the question of contraction for the improvement of Gedney's Channel, at the estimated cost of

$4,500,000, was wholly dismissed, the work that in the meantime had been done and was being done on this channel foreshadowed the possibility of accomplishing the entire contemplated improvement by means of dredging alone. Therefore, the Board of Engineers recommended that the dredging be further extended, and that if the results continued to be favorable and altogether successful, the delay and cost of constructing contraction-works might be avoided.

At the beginning of November, 1886, 303,869 cubic yards had been dredged from this channel, and some doubt existing as to whether the shifting of sand during winter storms would not again fill up the cut arrangements were made for determining this question by having comparative surveys made; one of which was taken between the 17th of October and 2d of November, 1886, and the other in May and June of 1887. The surveys were made with the best means, and greatest possible accuracy.

The permanency of the results of dredging, as shown by these comparative surveys, will be seen by the following quotations relating thereto from Col. McFarland's Report of 1887 :

"The depths were found to agree almost exactly with the depths given by the survey made in the fall, the only difference being that those obtained in the spring were found to be one or two tenths of a foot greater.

"This is a very satisfactory result, for it shows conclusively that for eight months, including the stormiest season of the year, the channel has maintained the increased depth which it had received; and it leads to the belief that the still greater depth which the act of Congress calls for may be equally maintained when once secured."

Permanency of the Improvement Tested as the Work Progressed.

As the work progressed, from year to year, various careful comparative surveys were made to ascertain if or not the depths of water attained were being maintained, and if not, to what extent they had been diminished.

These surveys invariably proved that while the depth of water had in no part of the channels become less, it had in some places become a trifle greater.

For results or the first two of these comparative surveys, see page 16. Relating to other test surveys the report for 1888 says:

"Surveys made in December, 1887, and May, 1888, show that no shoaling whatever had taken place on the bar in the interval of six months, during which no dredging was done there. As a like comparison was made a year ago, with precisely the same result, there are good grounds for expecting that the dredged channel across the bar may maintain its new dimensions by the action of the current alone."

The report of the Engineers for 1889, says:

"A survey of the Main Ship Channel from below the Narrows out along the improved channel to deep water beyond the bar, was made in June, 1889, and the resulting charts will soon be published for the information of mariners. These charts, which were first made in December, 1888, in separate sheets, covering the several sections of the improved channel, have been eagerly sought after by all the steamship companies of the port, to whom they have been liberally distributed free of charge.

"The survey just completed shows that the improvement is in the most gratifying condition. There is no indication that Gedney's Channel has shoaled since the last survey, of December 29, 1888, when the least depth in the channel width of 500 feet was 30 feet at mean low water. The Bayside Channel is entirely free from the small shoal spots which formerly existed in it, at or near the eastern entrance to the Swash Channel, and the line of deep water is now direct from the western entrance to Gedney's Channel, westward to the southern entrance to Main Ship Channel opposite to Red Buoy No. 10, and the least depth throughout the entire width of 1,000 feet is 30 feet at mean low water.

"The Main Ship Channel, west of Flynn's Knoll, from Buoy No. 10, the northern limit of the 30 foot curve in Sandy Hook Bay, to Buoy No. 12, the extreme northern limit of the present improvement, has 29 feet at mean low water between parallel lines 50 feet and 500 feet, respectively, west of the line of buoys C 2 and C 6. The 30 foot channel between the same extreme north and south points has an average width of 350 feet.

"When it is remembered that before this improvement began, in 1885, the least depth in Gedney's Channel was 22.3 feet, in Bayside Channel 24.3 feet, and in the Main Ship Channel, west of Flynn's Knoll, 22.6 feet—all at mean low water—the great results attained by the work just reported will be quite apparent. The noticeable result is that there is now (1889) a navigable channel from the wharves at New York City to the sea, affording 30 feet depth, approximately, at mean low water, and 34.8 feet at high water, and that it is practicable for the largest steamer which

visits the port to pass in or out over the bar in fair weather without regard to the tides."

Relating to the durability of the improvement, Col. Gillespie, still later on, in his report of 1890, says:

"Surveys of all the channels undergoing improvement were made in July, 1889, and again during January and February, 1890. These surveys show that the improvement is in a very satisfactory condition. Gedney's Channel and Bayside Channel (east and west) are practically completed, having a depth of 30 feet at mean low water, for the full projected width of 1,000 feet. The Main Ship Channel west of Flynn's Knoll has a depth of 30 feet, mean low water, for a width of 500 to 800 feet, and a depth of 28 feet for a width of 800 feet throughout.

"The severe storm of September 9, 1890, which caused a suspension of work for one week, does not appear to have had any effect on the improved channels. There is no evidence of shoaling, and the soundings of the various surveys agree so well with one another that it seems highly probable that the improved depths will be well maintained.

"When the project is completed" (as it now is, Oct. 10th, 1891) "it will be practicable for the steamship companies to establish a regular hour of sailing without regard to tides."

There is now a continuous channel 1,000 feet wide and 30 feet deep at mean low water, extending from the Narrows to deep water of the ocean; and the largest steamships can enter and leave the port at any hour, irrespective of the condition of high or low water.

Government Appropriations for the Improvement.

For Gedney's Channel, by act or July 5, 1884.....	$ 200,000
For New York Harbor, by Act of August 5, 1886...	750,000
For New York Harbor, by Act of August 11, 1888..	380,000
For New York Harbor, by Act of September 19, 1890,	160,000
Total.....	$1,490,000

Estimated Cost by Dredging.

As estimated by the Government Engineers, Colonels McFarland and Gillespie, the whole amount of dredging required to complete a continuous channel from the deep water of the ocean to the Narrows, not less than 1,000 feet wide, and not less than 30 feet deep at mean low water, would be 4,300,000 cubic yards.

Respecting the cost of such a channel by dredging alone, Col. Gillespie, in his report for 1885, estimated 50 cents per cubic yard for Gedney's Channel work, and 40 cents per cubic yard for that of the main ship channel. But, in 1886, the Engineers estimated the cost between 34 and 35 cents per cubic yard, and that, at this price, the improvement would cost $1,490,000.

Respecting the cost of such a channel, by dredging alone, Col. Gillespie, in his report for 1890, says:

"The estimated cost for opening the channel by dredging, revised in 1886, was fixed at $1,370,000, which was again increased in 1887 to $1,490,000."

After the improvement began, it was found essential to extend the improvement of the Main Ship Channel north of Buoy No. 12, to remove the Northwest Shoal, to deepen the Bayside Channel, and to extend the Gedney Channel; none of which were included in the original project, and which accounts for the increased estimates of the final improvement.

What the Completed Improvement has Actually Cost.

The improvement having been made under several different contracts, varying in number of yards, and in price per yard, the entire cost is, of course, made up by the aggregate amount paid on all the several contracts, which is $1,285,862.94 for the removal of 4,875,079 cubic yards (instead of 4,300,000, as first estimated it would be necessary to remove), being an average of 26.4 cents per cubic yard.

NUMBER OF CUBIC YARDS REMOVED—AVERAGE COST PER YARD—AND TOTAL COST OF THE MAIN SHIP AND GEDNEY'S CHANNELS, RESPECTIVELY:

	No. of Cubic Yards Removed.	Average Price per Cubic Yard.	Total Cost.
Main Ship Channel	3,201,411	25.26 cents.	$ 808,850 71
Gedney's Channel	1,673,688	28.5 "	477,012 23
Totals	4.875,079	26.4 cents.	$1,285,862 94

Saving to the Government by Means of Dredging.

By executing the entire work on both channels exclusively by dredging, not only has the Government saved the cost of the contracting works, but has greatly shortened the period required for the completion of the improvement to the great advantage of commerce, without closure of any of the smaller channels across the shoals at the entrance to the Harbor.

Difference Between the Amount of Material the Contractors Were Paid for Removing, and the Amount of Channel Space Obtained.

Much of the material in the Main Ship Channel, consisting of fine sand, clay and sedimentary mud, was so nearly of the same specific gravity as water, that when it became agitated and minutely incorporated therewith, by the action of the pumps and currents in the suction pipes and bins of the ships and scows, it consequently settled so slowly in the receiving bins that a portion of it went overboard with the overflow; and, owing to its light weight, was carried by the cross currents beyond the walls of the channel, greatly to the benefit of the Government and corresponding disadvantage to the contractor.

Referring to these transverse currents and their good effect of the desired results of the work performed, Col. McFarland in his report for 1888, says:

"The work done during the winter on the shoal in the Main Ship Channel was surveyed April 16, and 177,935 cubic yards measured in place were found to have been removed from the shoals. The quantity removed by the dredges amounted, however, to only 128,453 cubic yards measured in scows, which would not correspond ordinarily to more than 102,762 cubic yards in place. It is apparent, therefore, that the work of the dredges has been materially supplemented by the currents of the Bay, which at this point runs transverse to the channel instead of along its axis, and the tendency is therefore to carry overflow material upon the adjacent shoals. A survey made in June to ascertain whether this material found a lodgment in the channel at some point further down stream, indicates, on the contrary, that the channel has slightly deepened from natural causes alone, both in the prolongation of the dredged area, where the work has been done, and in the dredged area itself, where work has been suspended for six weeks. These changes are highly satisfactory as far as they go, both as regards the permanency in the dredged

channel and as regards the great saving that will result in the cost of carrying out the project, if, through the assistance of the currents, the place measurement continues to exceed the scow measurement.

"Thus it is seen that on this part of the work, up to the time of this survey, the contractors improved the channel by removing one and seventy-three one hundredths cubic yards of material for each cubic yard they were paid for handling."

By Whom the Work was Done.

Though there were several others who undertook portions of the work, the Joseph Edwards Dredging Company, of the City of New York, performed 88.2 per cent. of the entire undertaking; and other contractors, all told, 11.8 per cent.; while still other contractors, though spending large sums of money for plant and making frequent attempts, failed to perform any part of the work.

Of all the contractors who from time to time put in bids for work on the Improvement, the only ones to whom any contracts where awarded were Roy Stone, the Brainard Brothers, Joseph Cummings (of the firm of Morris & Cummings), and the Joseph Edwards Dredging Company.

Of these four contracting parties the only ones who succeeded in doing any part of the work were the Brainard Brothers, and the Joseph Edwards Dredging Company.

The total number of cubic yards excavated from the channels, taken to sea and deposited outside of the Scotland Light Ship, in not less than 14 fathoms of water, was 4,875,079, of which the above named Company did 4,299,858 yards; and other contractors, a total of 575,221 yards; as shown by the following tabulated statements, made up from the Reports of the Government Engineers.

It will also be seen by these Tables that the above named Company removed this large amount of material at an average price of 24.48 cents per cubic yard; and that the general average price paid to other contractors was 40.53 cents per cubic yard. Being at the rate of 65.6 per cent. more than was paid this Company.

While the price paid the other contractors for work on the Gedney's Channel was at the rate of 136 per cent. more than the average price received by this Company.

Contracts Taken by the Joseph Edwards Dredging Company for Work on the Main Ship and Gedney's Channels.

DATE OF CONTRACTS—NO. OF YARDS CONTRACTED FOR—WHEN TO BE COMPLETED—EXTENSION OF TIME—DATE OF COMPLETION—NO. OF CUBIC YARDS REMOVED—AND PRICE PER YARD.

Date of contract.	Number of yards contracted for.	To be completed.	Extension of time to	Date completed.	Number of yards removed.	Price cents per cubic yard.
GEDNEY'S CHANNEL.						
April 27, 1887.....	700,000	Dec. 1, '88.	Dec. 31, '88.	Dec. 22, '88.	770.410	28.5
Dec. 15, 1888.....	600,000	Jan. 1, '90.	No extension.	Nov. 30,' 89.	599,362	17
Total					1,369,772 yards.	
Average.....					22.84 cents.	
MAIN SHIP CHANNEL.						
May 19, 1887.....	1,500.000	Dec. 1, '88.	June 30, '89, and to Dec. 31, '89,	Dec. 3, '89.	1,305,202	28.5
March 22, 1890....	On Brainard's 1,000,000 yard contract.	June 18, '90, withdrew.			169,754	16⅔
March 18, 1890....	425,000	Jan. 1, '91.	No extension.	Aug. 13, '90.	425,000	23.5
Aug. 13, 1890.....	530,000	June 1, '91.	No extension.	Feb. 6, '91.	530,000	22.6
Feb. 16, 1890.....	500,000	Oct. 1, '91.	Nov. 1, '91.	Oct. 10, '91.	500,130	23.9
Total.....					2,930,086 yards.	
Average.....					25.25 cents.	

TOTAL NUMBER OF YARDS AND GENERAL AVERAGE PRICE.

Gedney's Channel.....	1,369,772 cubic yards
Main Ship Channel.....	2,930,086 " "
Total number of yards removed.....	4,299,858 "

General average price per cubic yard, 24.48 cents.

To Whom Contracts Were Given.

DATE OF CONTRACTS—LOCATION OF WORK—NO. OF YARDS CONTRACTED FOR—NO. OF YARDS REMOVED BY DIFFERENT CONTRACTORS, AND PRICES PAID.

Name of contractor.	Date of contract.	Location of work.	Number of yards contracted for.	Number of yards removed.	Price cents per cubic yard.	Amount.
Roy Stone.....	Feb. 7, 1885.	Gedney's Channel.	200 ft. wide 28 ft. deep.	None.	Taken at 33.	
Elijah Brainard....	July 31, 1885.	Gedney's Channel.	320,000	303,896	54	$164,103.84
Joseph Edwards Dredging Co...	April 27, 1887.	Gedney's Channel.	700,000	770,410	28 5	211,016.85
Joseph Edwards Dredging Co....	May 19, 1887.	Main Ship Channel.	1,500,000	1,305,202	28.5	371,982.57
Brainard Brothers.	May 11, 1888.	Main Ship Channel.	200,000	200,000	28.5	57,000.00
Joseph Cummings..	May 11, 1888.	Main Ship Channel.	800,000	None.	28.5	
Joseph Edwards Dredging Co....	Dec. 15, 1888.	Gedney's Channel.	600,000	599,362	17	101,891.54
Brainard Dredging Co.....	Nov. 26, 1889.	Main Ship Channel.	1,000,000 (a)	71,325	16⅞	12,036.09
Joseph Edwards Dredging Co....	Mar. 22, 1890.	Main Ship Channel	(b) Done on Brainard's contract	169,754	16⅞	28,645.98
Joseph Edwards Dredging Co....	Mar. 18, 1890.	Main Ship Channel.	425,000	425,000	23.5	99,875.00
Joseph Edwards Dredging Co....	Aug. 13, 1890.	Main Ship Channel.	530,000	530,000	22.6	119,780.00
Joseph Edwards Dredging Co....	Feb. 16, 1891.	Main Ship Channel.	500,000	500,130	23.9	119,531.07

Total number of cubic yards removed.....	4,875,079
Average price per cubic yard.....	26.4 cents.
Total cost of the work.....	$1,285,862.94

(a) Brainard Dredging Co. withdrew from this contract April 16, 1890.

(b) Joseph Edwards Dredging Co. withdrew from work under this contract June 18, 1890, and the contract was annulled.

Time Taken to Execute the Improvement.

Work was commenced on the first contract September 26, 1885, and the work on the last contract was completed October 10, 1891, covering a period of six years and fourteen days; but the Joseph Edwards Dredging Company did not commence until August, 1887.

At the average rate of progress made on the work by this company, the entire improvement could have been made by them in a period of four years and nine months—and, at the average price paid this company, the entire improvement would have cost $1,193,419.34.

Nature of the Material and Amount Handled Compared with Amount the Contractors were Paid for Removing.

Referring to the material in Gedney's Channel, Col. Gillespie, in his report for 1885, says:

"The borings just made by a diver show that the obstructing shoal is composed of gravel, coarse gray sand and shells for a depth of two feet or more, well compacted, underneath which lies coarse sand, the larger shingle of the size of a pigeon egg being on the crest of the bar, and the underlying sand similar to that of the adjacent beach and shoals."

Referring to the relative character of the material in Gedney's and the Main Ship Channel, the Engineer in his report for 1888, alluding to the Main Ship Channel, says:

"This latter material is much more difficult to dredge, not only on account of the large percentage of mud too fine to be caught in the bins, but also on account of its lying so compactly on the bottom, and being consequently much more difficult to raise with the pumps."

The material removed from the Main Ship Channel consisted of fine sand and mixed sedimentary mud and clay; the mud and clay formed a hard crust about two feet deep over-lying the fine sand. This mixture of mud and clay, when broken up and thoroughly mixed with the water by the agitating process of the pumps, and being so fine and so nearly the specific gravity of water, it settled so slowly that, in a portion of this channel, it required the excavation of a much greater percentage of material than was retained in the scows and bins, as much of it would unavoidably pass overboard with the overflow—and a large proportion of it was carried by cross currents beyond the walls of the channels to the adjacent shoals, at a loss to the contractor, but corresponding gain to the

Government, as the amount of material for which the contractor was paid was estimated only by scow and ship-bin measurements. See Engineer's Report, page 20.

Magnitude of the Undertaking.

Besides the excavation of about 5,000,000 cubic yards of material and its transportation, at an average round trip of 21 miles, there had to be dredged, as before explained, a large amount more which went overboard with the overflow, especially in removing the crust of mud and clay in the Main Ship Channel.

This material had to be raised from 24 to 35 feet under water and elevated to a height on shipboard, which from the bed of the channels amounted to an elevation of from 36 to 46 feet, according to state of tide and depth of channel.

For each cubic yard of solid material thus handled there had to be raised many cubic yards of water, at a height, from the surface of the Bay to the mouth of the discharge pipes, say from 10 to 15 feet.

Therefore it was necessary to elevate a mixture of mud, clay, sand and water amounting to many times the cubic yards of material which the contractor was paid for handling.

How the Work was Done, or System of Dredging Employed.

The system of dredging employed was what is known as that form of hydraulic dredging in which the means for excavating and elevating the material to be removed are centrifugal pumps—*those employed being the "Edwards Cataract Pump,"* illustrations of which are shown on pages 41 to 46.

No other known system of dredging could be adapted to overcome the hereinafter described difficulties incident to the work of improving New York Harbor.

But besides the employment of centrifugal pumps, it was also necessary to devise the plant in such a manner as to adapt it to the peculiarities of the work, having reference to the exposed position, depth of water, etc.

Therefore, in view of the magnitude of the work and the many difficulties attending it, together with the fact that heretofore no attainments in the art of dredging were adequate to the undertaking, the Joseph

Edwards Dredging Company devised such means as were most likely to meet the emergencies of the case, and immediately commenced the construction of the necessary plant; and soon became contractors on the work; and how well they succeeded is best indicated by what they accomplished—as shown by the foregoing Official Reports of the Engineers in charge.

Relating to Difficulties Encountered.

EXPOSED POSITION OF THE WORK AND DUMPING GROUND TO WINDS AND OCEAN; EVEN IN FAIR WEATHER.

The Lower Bay, in which the Main Ship Channel is located, embraces an area of about 100 square miles, estimating inside, northward and westward, of a line drawn from Sandy Hook to Coney Island, with an opening outward to the ocean, between Sandy Hook and Coney Island, 7 miles wide. Through this opening the work on the Main Ship Channel was exposed to the full sweep of the ocean from the northward around by the east to the southeast; and from the southwest and west to winds sweeping down Raritan Bay, while winds from the northwest and north had a scope across and down the channel from Staten Island and the Narrows. Thus exposed to the wind from every quarter, except the south, it was often impossible to handle and tow the scows or even to work the dredging steamers, owing to roughness of the Bay, even in clear weather.

The Gedney's Channel, being outside of the entrance to the Bay, may be considered as located in the Atlantic itself, and therefore the work on this channel was exposed to the winds and roughness of the ocean from all directions, making it impossible to work here even as constantly as on the Main Ship Channel; while it was impossible to work on either channel during an easterly storm, and sometimes for days after, owing to continuation of an incoming rolling sea; and often when the dredges did work they were more or less belabored with rough seas.

THE LONG DISTANCE OF TRANSPORTATION OF THE MATERIAL TO THE DUMPING GROUND.

The dumping ground being outside of the Scotland Light Ship, the material removed from the Main Ship Channel had to be transported an average distance of 12 to 14 miles, making the round trip 26 to 28 miles, and that from the Gedney's Channel 6 to 7 miles, making the round trip

12 to 14 miles. As regards the transportation by towing, there was nearly always sufficient sea on to more or less strain the scows, and require a powerful tug to handle each separate scow.

THE GREAT DEPTH OF WATER IN WHICH THE DREDGING WAS DONE.

The depth of water from which this large amount of solid material was excavated was from 24 to 35 feet (according to state of tide and depth of channel), and had to be elevated on ship-board at a height of from 36 to 46 feet from the bed of the channels.

THE CONSTANT PASSING OF SHIPS, STEAMBOATS, OCEAN STEAMERS AND OTHER VESSELS, UP AND DOWN THE CHANNELS.

To avoid liability of collision with passing vessels, especially with large ocean steamers, it was frequently necessary to shift the position and stop the work of the dredges until the steamers had passed. Besides this, these larger steamers produced disturbing wake of the water, and, passing so frequently, interfered not a little with the work.

Notwithstanding the utmost caution, two collisions occurred, and one of the company's ships, the *Advance*, was run down, sunk and destroyed during the progress of the improvement.

DETENTIONS BY STORMS, FOGS, DRIFTING ICE, AND EXTREME WINTER WEATHER.

On account of rough sea, heavy storms and otherwise inclement weather, as, also, on account of thick and foggy atmosphere, even though there were no storm or roughness of sea, and sometimes because of running ice, it was often necessary to suspend operations of the entire plant, from one to several days, with no diminution of expense, save a trifle on fuel, which greatly delayed progress of the work and diminished the chances of profit to the company.

OBSTRUCTIONS ENCOUNTERED IN THE MATERIAL DREDGED.

As might be expected, in channels so long and extensively navigated, there were frequently found minor yet troublesome obstructions, as fragments of wrecks, anchors, chains, bars of iron, cannon balls, etc., which, when encountered, sometimes caused damage to the pumps, suction pipes and drags. Some such object, encountered and passed over, would again and again be found in the way, necessitating a search for the removal of

it; and sometimes, before being definitely located and removed, would not only break a drag but carry away both drag and suction pipe, and delay the operation of the entire dredge for some days, resulting in a loss to the contractor of several thousand dollars.

TRANSVERSE PRESSURE ON THE DREDGES BY CROSS CURRENTS IN THE MAIN SHIP CHANNEL.

The constant transverse currents that set nearly at right angles across that portion of the Main Ship Channel extending north and south, necessitated the heading of the dredging ships in a diagonal direction to the line of the channel, which caused the cross currents to carry one of the suction pipes, with its drag or mouth, away from the side, and the other under the bottom of the dredging steamers, which greatly and constantly interfered with their more successful operation, and frequently causing injury to the suction pipes, and sometimes badly breaking them.

THE FINENESS AND LIGHT WEIGHT OF THE MATERIAL IN THE MAIN SHIP CHANNEL.

The composition of a part of the material in the Main Ship Channel was of such a nature that, when it became thoroughly agitated and incorporated with the large amount of water handled, and being so nearly the same specific gravity of water, only a variable percentage of the amount dredged would settle in the scows and bins of the steamers, while the balance of it would go overboard with the overflow—the respective proportions that would settle and overflow depending, of course, on the nature of the material being dredged.

FREQUENT BREAKDOWNS OF SOME PART OF THE PLANT.

The extent and nature of the plant, and the character and location of the work it performed, rendered it impossible to avoid numerous accidents and breakdowns, thus necessitating the keeping on hand of a large supply of duplicate parts, to diminish delay of repairs, and which greatly increased the cost of the general outfit.

EXTRAORDINARY WEAR AND DEPRECIATION OF THE PLANT.

Owing to the tension to which the mechanicism of the plant was submitted, and the speed at which it was driven, together with the cutting effect of sand rapidly forced through the suction pipes and pumps, and

scattered by wind and spray throughout the machinery, and the strain upon the ships incident to being constantly loaded and unloaded, the extensive wear and depreciation of the plant constituted a serious drawback to the Contractor, it becoming necessary for the outfit to undergo general yearly repairs, amounting sometimes to a cost of twenty or more thousand dollars.

Government Engineers in Charge.

The Engineers, under whose direction the Improvement of New York Harbor was conducted, were Col. Geo. L. Gillespie and Col. Walter McFarland, Corps of Engineers, U. S. Army.

Col. Gillespie, being in charge at the commencement, made the preliminary survey, and projected and recommended the plan by which the improvement has been expeditiously and successfully accomplished, and at a cost to the Government not exceeding 25 per cent. of the amount originally estimated to be necessary to attain the desired results by the only other project presented.

During an absence of Col. Gillespie, the Improvement was in charge of Col. McFarland. After the demise of Col. McFarland, Col. Gillespie again took charge, and under him, and in accordance with his plan and recommendation, was completed, as well as commenced, the Improvement of New York Harbor.

Harmonious Relations Between Engineers in Charge and Contractors.

As was to be expected, in an undertaking of such a nature and magnitude as the Improvement of New York Harbor, various difficulties had to be encountered and overcome by the Engineers in charge as well as the Contractors; in view of which it is worthy to mention that, from the commencement to completion of the work, the most harmonious relations existed between them; the representatives of the Government being always considerate of the Contractors, they, in turn, co-operated with ambition to bring the undertaking to a successful consummation.

The Pumps the Vital Parts of the Plant.

As the pumps are the chief features of the plant, it can be readily understood that, substantially, as work the pumps so works the plant.

Though a self-propelling and self-containing dredging steamer needs to be in all its appointments rightly constructed and properly managed, yet it is apparent that however well may be contrived everything else, and however skillfully managed, the results attained will be put partial without an effective pump.

Besides, as the pumps are the parts of the plant submitted to the greatest wear by the action of sand, and are liable to the greatest number of breakages from various resistant objects passing through them, they need to be provided with the best possible means of endurance and ready repair.

That the pumps employed on this work meet all these requirements is sufficiently demonstrated by what has been done with them, not only on the Improvement of New York Harbor, but by what they have accomplished on difficult work elsewhere.

So well contrived to resist breakage, and so powerful is this pump, that it has drawn up from a depth of 35 feet under water, and elevated from the bed of the channel to the mouth of the discharge-pipe, a height of 46 feet, bars of pig iron heavy as a man can lift, cannons balls, &c., and without damage to itself that could not be repaired in 20 minutes, and at a trifling cost; which, without special provisions for encountering such obstacles, would often totally wreck the pump.

Special Evidence of the Capacity of the Edwards Cataract Pump.

The following Statement and Table, illustrative of the detailed record kept of the work done, is taken from the Government Reports, giving an account of the work by one of the ships, (the *Reliance*) during a period of 28½ days, from Aug. 27th, to October 10, 1891.

Statement of Averages.

Reduced from the following Table of 28½ *days work, from Aug.* 27*th to Oct.* 10, 1891, *on Gedney's Channel by the Dredging Steamer Reliance.*

Average time pumping per load.....48 $\frac{6}{10}$ minutes.
" cubic yards per load.....584.87 cubic yards.
" time pumping per day.....4 hours 58 $\frac{4}{10}$ minutes.
" " on bar per day.....5 hours, 43 $\frac{4}{10}$ minutes.
" " bar to dump.....34 minutes.
" " dumping.....12 $\frac{1}{10}$ minutes.
" " dump to bar.....25 $\frac{7}{10}$ minutes.
" " dump to anchor.....66 $\frac{6}{10}$ minutes.
" " anchor to bar.....51 minutes.
" " under steam per day.....16 hours, 4 $\frac{2}{10}$ minutes.
" No. of loads per day worked...6.73.
" cubic yards per day worked....3,936.65 cubic yards.
" rate per minute.....12.03 cubic yards.
Time lost by repairs..... .....2 hours, 24 minutes.
" " " weather.....32 " 50 "
Total time lost ....35 " 14 "

On the 10*th of September:—*

The 6th load (of 611 cubic yards) was done at the rate of 15.27 cubic yards per minute;

The 7th load (of 608 cubic yards) was done at the rate of 16.43 cubic yards per minute;

Or an average of 946 cubic yards per hour.

Date.	Cubic yards excavated.	Time pumping.	Rate per minute.	Total time on bar.	Time Lost.										Direction and force of wind.	Condition of sea.	No. of loads.	Remarks.
					Turning.	Bar to dump.	Dumping.	Dump to bar.	Dump to anchor.	Off cut and other causes.	Anchor to bar.	By repairs.	By weather.	Total time.				
		H. M.	Cubic yards	H. M.	H. M.	H. M.	H. M.	H. M.	H. M.	H. M.	H. M.	H. M.	H. M.	H. M.				
1891.																		
Aug. 27	2 150	3—08	11.44	3—29	0—10	2—15	0—56	1—12	1—05	0—11	.....	.....	....	8—58	S. E. to S. S. W.	Smooth to Chop	4	One load from Main Ship Channel in the morning.
28	4 174	5—28	12.72	6—04	0—18	3—51	1—36	2—23	1—12	0—18	0—47	.....	....	16—25	S. W. to N. W.	Chop	7	
29	4 196	5—43	12.23	6—22	0—33	3—44	1—27	2—32	1—17	0— 6	0—38	.....	.....	16—00	N.W to S. W.	Smooth	7	Week ending August 29th, 3½ days on Main Ship Channel.
31	1 666	2—20	11.82	2—37	0—11	1—26	0—39	0—43	1—25	8—04	1—02	.....	.....	15—50	Fresh. S. E.	Swell.	3	
Sept. 1	4 563	5—42	13.34	6—44	0—26	3—54	1—31	2—15	0—55	0—36	1—08	.....	.....	16—57	Light. N. N. E	Swell.	8	
2	4 344	5—50	12.40	7—03	0—32	3—49	1—19	2—41	0—52	0—41	1—07	.....	.....	16—51	Light. N. W.	Smooth	7	Foggy in the morning.
3	4 376	6—17	11.60	7—16	0—31	3—46	1—20	2—14	0—52	0—28	0—43	.....	.....	16—11	Light. W.S.W.	Smooth	7	
4	4 341	6—11	11.40	7—27	0—30	4—12	1—25	2—03	0—54	0—36	0—42	.....	.....	16—43	Fresh F. S. E.	Rough.	7	
5	1 368	1—41	13.54	2—10	0—14	1—38	1—32	0—42	1—46	0—15	0—54	.....	8—58	17—40	Strong N. E.	Very Rough	3	Too rough to work.
7	4 056	6—04	11.14	6—58	0—18	3—57	1—24	2—31	0—56	0—36	1—06	.....	.....	16—55	Light. N. W.	Chop.	7	
8	4 046	5—35	12.08	6—17	0—21	3—53	1—36	2—28	1—00	0—21	0—32	0—58	.....	16—44	N. W.	Smooth	7	Valve-stem of large washout pump broke.
9	3 148	5—06	10.28	7—32	0—26	2—57	1—23	2—18	0—58	0—34	0—52	1—26	.....	16—00	N. W.	Smooth	6	Belt on port pump broke.

	10	4 790	6—24	12.47	7—13	0—30	3—53	1—37	2—42	1—02	0—19	0—45	.....	.....	17—12	N. W.	Calm.	8	Sixth load (of 611 cubic yards was at the rate of 15.27 cubic yards per minute.
	11	4 582	6—10	12 38	7—17	0—34	3—55	1—29	2—34	1—02	0—23	0—33	.....	.....	16—40	Light N.W. to S. W.	Calm to Chop.	8	Seventh load (of 608 cubic yards) was at the rate of 16.43 cubic yards per minute.
	12	4 055	6—33	10.32	7—47	0—37	3—30	1—27	2—09	1—27	0—37	0—33	.....	.....	1 (53	Brisk. S. E.	Chop.	7	
	14	3 510	6—16	9 33	7—20	0—39	3—25	1—18	2—29	1—19	0—25	1—11	.....	.....	17—02	Brisk. N.	Heavy Chop.	7	
	15	4 076	6—30	10.45	7—43	0—30	3—38	1· 24	2—16	1—06	0—43	0—48	.....	.....	16—55	Light. N. W.	Smooth	7	
	16	4 112	6—26	10.65	7—26	0—37	3—25	1—25	2—06	1—12	0—23	0—51	.....	.....	16—25	Light N. W.	Smooth	7	
	17	4 296	4—44	15.12	5—17	0—16	4—43	1—13	2—59	0—58	0—17	1—00	.....	.....	16—10	Fresh. S. S W.	Chop.	7	
	18	4 232	4—46	14.80	5—03	0—09	4—39	1—16	2—59	0—53	0—08	1—01	.....	.....	15—51	Light. N. W.	Chop.	7	
	19	3 630	4—51	12.47	5—55	0—21	3—58	1—10	2—29	1—13	0—43	1—00	.....	.....	15—45	Light. V'riable	Smooth	6	September 28th, 29th and 30th, worked on the Main Ship Channel.
Oct.	1	1 761	2—26	12 06	2—26	.....	2—23	1—02	0—58	1—02	.....	.....	.....	.....	7—51	Stormy. E.	Rough.	3	One load on Main Ship Channel. Started for Gedney's Channel 12.09 P. M.
	2	3 682	4—18	14.27	4—51	0—10	4—09	1—14	2—46	0—58	0—23	0—46	.....	.....	14—44	Light. V'riable	Swell.	6	
	3	3 069	4—12	12.13	4—22	0—04	3—30	1—02	2—06	1—18	0—06	0—50	.....	0—50	13—58	High. S. E.	Swell.	5	
	5	2 370	3—17	12.03	3—24	0—07	2—40	0—48	1—35	1—06	0—20	1—00	.....	4—00	14—53	Light to Strong. S.E.	Heavy. Swell.	4	Delayed at anchor by fog.
	6	3 766	4—29	14 00	5—04	0—16	3—55	1—04	2—43	0—54	0—19	0—35	.....	.....	14—15	Fresh. N.W. to N. E.	Chop.	6	Oct. 7th, S. E storm —wind and rain—no work.
	8	2 088	3—11	10.93	3—35	0—19	2—29	0—42	1—48	1—03	0—35	0—48	.....	4—00	14—55	Fresh. N W.	Heavy. Swell.	4	Delayed at anchor by weather.
	9	3 690	4—44	13 00	4—59	0—15	3—31	1—07	2—12	1—28	.....	0—46	.....	.....	14—03	High. N	Swell.	6	
	10	2 216	3—14	11.42	3—26	0—08	2—17	0—56	1—09	1—00	0—04	0—57	.....	.....	9—45	High. N	Swell.	4	
		102 353	141—46	12.03	163—07	10—02	99—22	30—22	62—35	32—13	18—31	22—55	2—24	17—48	448—00	.....	.....	175	

Advantages of Pump Dredging Over Other Systems.

It can be employed where no other system of dredging is possible, as shown by its application to the Improvement of New York Harbor, on which the steamer dredges have successfully worked in heavy sea-way.

It leaves a smoother and more uniform bottom than any other system.

It can do the work at much less cost than any other system of dredging, wherever it is applicable.

It can go over the ground much more rapidly where only a slight cut of material is required to be taken.

It is the only system of dredging that can be employed to keep channels open that have a tendency to fill up, as a dredging steamer can pass over large areas and take only the needed skimming of material.

Outline Description of the Plant.

The plant provided for executing the work of the Improvement of New York Harbor by this company consists of 3 sea-going Dredging Steamers, 4 large Scows, 4 Steam Tugs for towing scows, 1 Steam Supply Boat, 1 Steam Tender, Docks, Repair Shops, Storehouses, Water Works, Coal Bins, Etc.

The Dredging Steamers, known as the *Reliance*, *Advance* and *Mount Waldo*, are not essentially unlike other sea-going steamers, aside from their dredging outfits. Their dimensions and daily working capacity are as follows:

THE RELIANCE.

Length.....157 feet.
Beam..... 37 "
Depth of Hold..... 16 "
Twin Propellers and Compound Engines.
Average carrying Capacity.....650 cubic yards.

Daily working capacity of this Dredge on Gedney's Channel, where the material consisted of coarse sand, and freighting distance about 6 miles each way, was 7 loads; and on the Main Ship Channel, where the material consisted of mud, clay and fine sand, and freighting distance about 12 miles each way, was 3 loads.

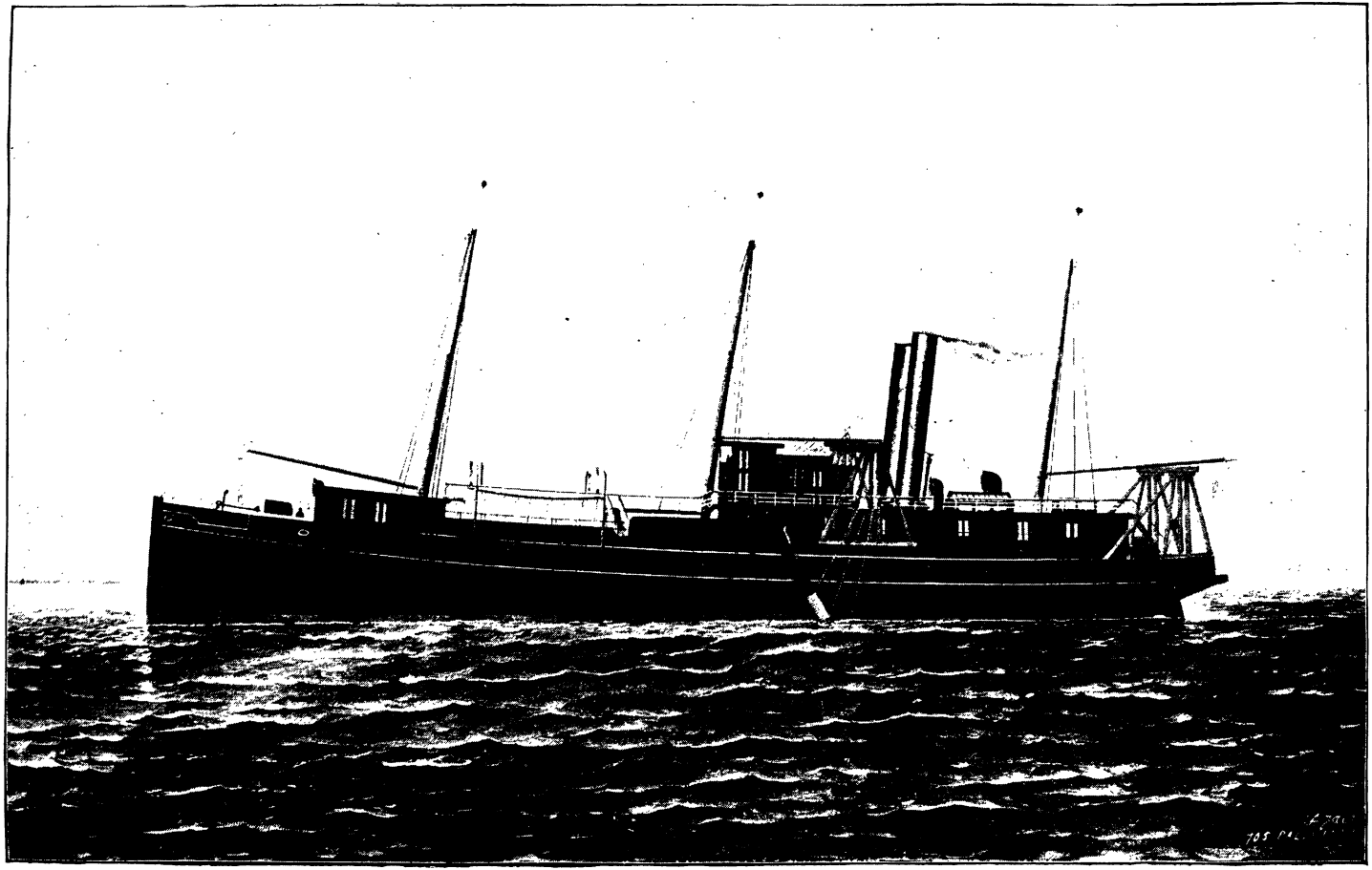

THE _RELIANCE.

THE ADVANCE.

Length..... .....132 feet.
Beam..... .... 34 "
Depth of Hold .... 8 "
Single Propeller and Compound Engine.
Average carrying Capacity.....500 cubic yards.

Daily working capacity of this Dredge, on the same channels, respectively, was also 7 loads and 3 loads.

THE MOUNT WALDO.

Length..... .145 feet
Beam..... 31 "
Depth of hold..... ..... 11 "
Single Propeller and Compound Engine.....
Average carrying capacity.. ..... 275 cubic yards.

Daily working capacity of this Dredge, discharging into scows, working on the Main Ship Channel, on material consisting of mud, clay and fine sand, was 8 scow loads of 500 yards each.

The Mount Waldo, except in the winter time, instead of being employed as the other two steamers were, namely, for dredging and transportation, was kept constantly employed at dredging, by discharging the material into scows and not into her own bins, and the scows towed to the dumping ground by steam tugs—the capacity of the scows being 500 cubic yards each.

Besides the 3 above described Steamer Dredges and 4 Scows, there were 4 powerful sea-going Tugs for towing the scows to sea; also a large steam Lighter employed as a supply boat, for furnishing the dredging steamers with coal, water, duplicate parts, provisions, &c., and also a steam Tug employed as a general Tender for convenience of the General Manager and Superintendent.

This Dredging Fleet was under the General Management of the President of the Company, Mr. Joseph Edwards.

A Brief Description of the Pumping Outfits.—Each steam dredge was provided with two pumping outfits and independently arranged, so that either could be operated regardless of the other; each outfit having a centrifugal pump, engine, suction and discharge pipes. The suction pipes, corresponding to the size of the pumps, one on either

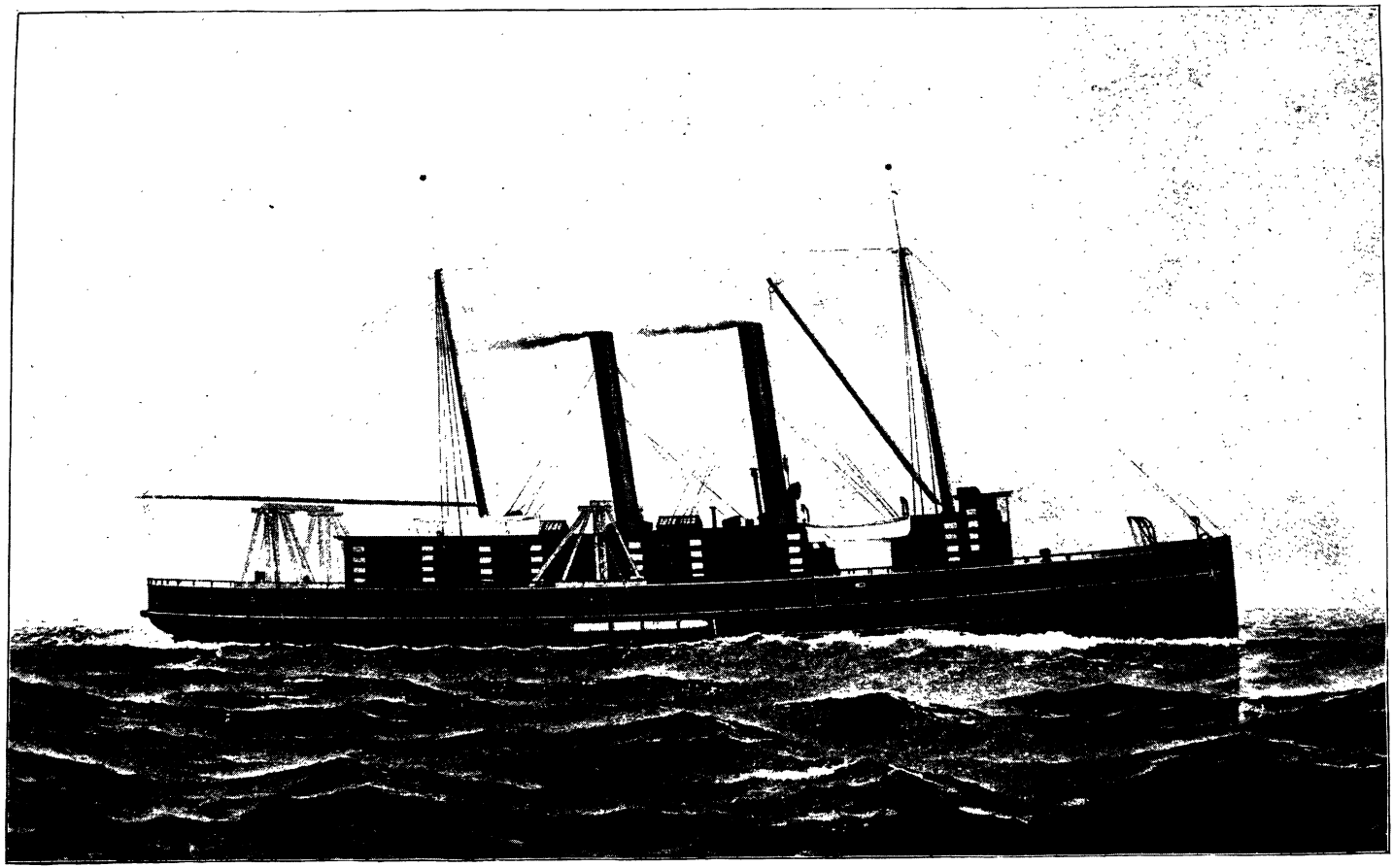

THE ADVANCE.

side of the steamer, located about midway from bow to stern, extend laterally from the pumps to the outside of the ship, then, turning with an easy bend at right angles, extend (when not in use) along the sides of the dredge, being held up, lowered and raised by suitable blocks and ropes which are worked by special hoisting engines. These suction pipes, 15 and 18 inches in diameter, are about 60 feet long, terminating about opposite the stern of the ship, with suitable mouth pieces, termed drags, to fit on the bed of the channel and facilitate the ingress of the material. See illustrations, pages 48 to 53, and lithographic plates.

To render the suction pipes flexible, so they will accommodate themselves to the pitching and rolling motions of the steamer, a section of them about 12 feet in length, located a few feet from the elbow, consists of rubber; these flexible sections being supported by special arrangement of triple chains and blocks against the vertical strain caused by the weight of the suction pipes themselves and what passes through them; and by tension chains against the longitudinal strain of the drags resting on the bottom.

The steamers and scows were provided with special arrangements to afford a long flow of the mixture of mud, clay, sand and water, between the discharge from the pumps and the over-flow outlets, to facilitate the settlement of the solid material in their bins. See plate V.

The scows were divided into compartments surmounted with longitudinal sluice-ways extending either way from a central receiving hopper. These sluices were provided along their course with a series of adjustable bottom and side-gates by means of which the material could be deposited faster or slower in the different compartments; whereby the load could be uniformly distributed throughout the length and breadth of the scows, to prevent them from listing, and enable them to be freighted to their full capacity. See plate V.

Method of Working the Dredging Steamers.—The steamers were kept under headway from the time they left their anchorage in the morning until they returned to it at night. When a dredge reached the channel the suction-pipes were lowered to an angle of from 30 to 40 degrees, to bring the drags in contact with the bottom. To keep the vessel on her line of work and supply the drags with material, she was kept constantly under steering headway. As soon as the sand bins were

THE MOUNT WALDO.

filled, the suction-pipes were hoisted out of water, and the steamer put under full headway for the dumping ground. While she was turning to return to the work again, the dump-gates were opened and her cargo discharged—the discharge being facilitated by pumping water into the bins with the dredging pumps. On again reaching the work, her speed was slackened, drags lowered and pumps started, and so on, until the time to return to her anchorage for the night.

The above brief general description affords but a limited view of the construction and performance of the plant. To fully appreciate the arrangement and effective execution of the steamer dredges, they needed to be seen in operation, especially in a heavy seaway.

Some idea may be had of the extent of the plant from the fact that, in connection therewith in one way and another, it included no less than 80 different steam cylinders.

Special Features of the Pump Employed on the Improvement of New York Harbor.—As it may be interesting to some to obtain a somewhat general knowledge of the pump employed in executing the improvement of New York Harbor, illustrations of it are inserted herein, and which so well represents its general construction, that it is not otherwise necessary to more than point out a few of its special features. These relate:

First. To the means of providing free ingress of the material to be pumped.

Second. To the means of changing the position of the outlet to any desired angle with the horizontal plane, independent of the suction.

Third. To the means of holding and adjusting the rotating parts of the pump against displacement by its suction force.

Fourth. To the means of preventing destruction of its more expensive parts by violent action of resistant objects liable to be drawn into it: and

Fifth. To the means of preventing, and readily and economically repairing damage liable to occur to it by violence as well as by ordinary wear.

(1.) By referring to illustration, page 41, which is a central vertical section, it will be seen that the wings (M M), opposite and equal to the

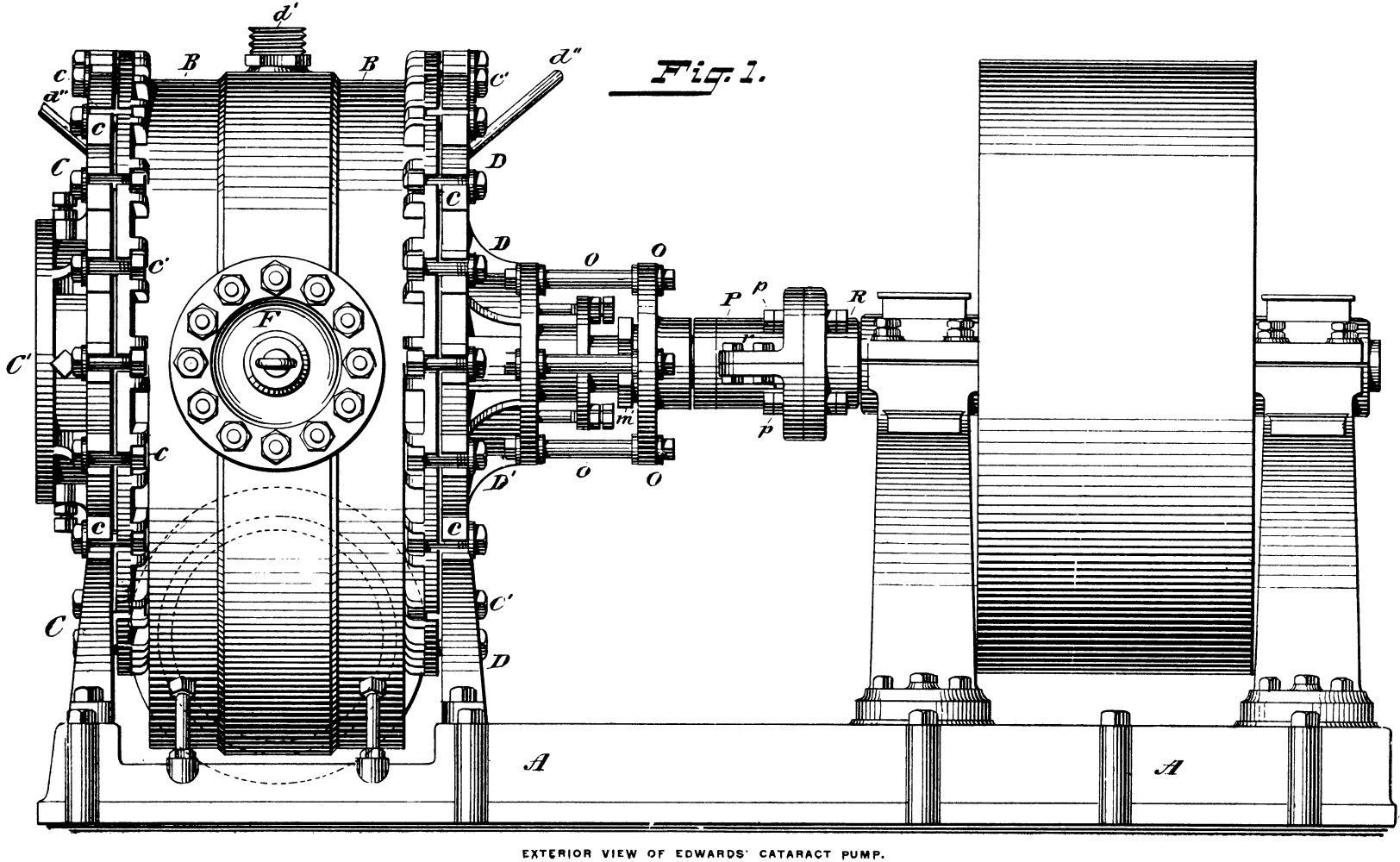

EXTERIOR VIEW OF EDWARDS' CATARACT PUMP.

diameter of the inlet (C'), are cut away, in the form of an ogee, whereby the current of the indrawn material is uninterrupted by rotation of the wings, until it reaches the central part of the pump.

(2.) The shell or casting (B B) is independent of the base, being held by the two heads (C C and D D), and the heads being screwed to the base or bed-plate (A A), therefore to vertically rotate the shell and so place the outlet in position to throw the discharge at any desired angle with the horizontal plane, and that, too, without detaching the suction, it is only necessary to remove the lug-bolts (c' c' c') which secure the shell to the heads.

(3.) To hold the rotating parts of the pump from being longitudinally displaced, and the wings from coming in contact with the suction head, by the suction force of the pump, the counter resistance is not obtained by dependence on the bearings of the shaft, as in other centrifugal pumps, but by utilizing, for an unyielding counter resistance, the head of the pump itself, explained as follows:

A circular yoke (O O) is fastened by collar bolts (o o) to the flange (D' D') of a central projection (provided for this purpose) on the front head of the pump. Surrounding the pump-shaft (see Fig. 6), where it passes through the circular yoke, is provided an externally threaded sleeve (T T), which, by a corresponding thread therein, is screwed into the said yoke. Upon the pump-end of this sleeve is a jam-nut (m' m'). Upon the outer end, and as a part of it, is a heavy flange (m); and next to the outer face of this sleeve is placed two or three loose smooth-faced washers (i i). Outside of and adjacent to these is the shaft coupling (P P), which unites the pump-shaft to the driving-shaft—the pump-end of the coupling being faced to work against the washers. The sleeve (T T) does not come in contact with the shaft, there being a space between them.

By this arrangement the longitudinal strain on the pump-shaft, caused by the suction pull on the rotating parts of the pump, will (through the medium of the shaft) first fall on the pump-end of the shaft coupling (P P), (which, of course, is immovably fastened to the shaft), then on the loose washers (i i), then on the flange (m m) of the adjustable sleeve (T T), then on the circular yoke (O O), then on the collar-bolts (o o), and then on the front head of the pump. This arrangement of the

Fig. 4.

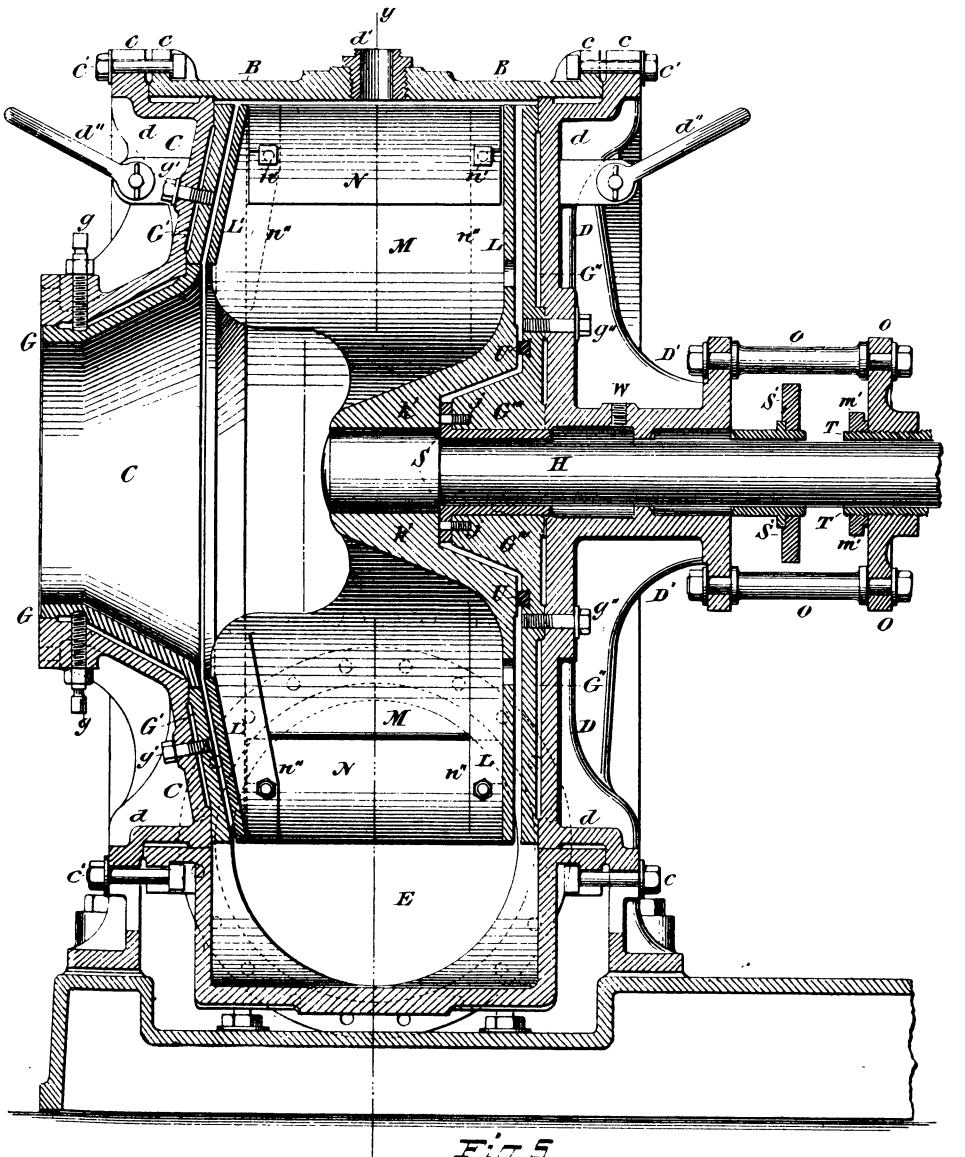

Fig. 5.

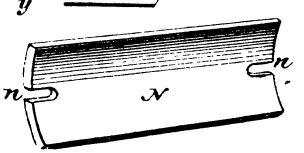

CENTRAL VERTICAL SECTION OF PUMP.

Fig. 2.

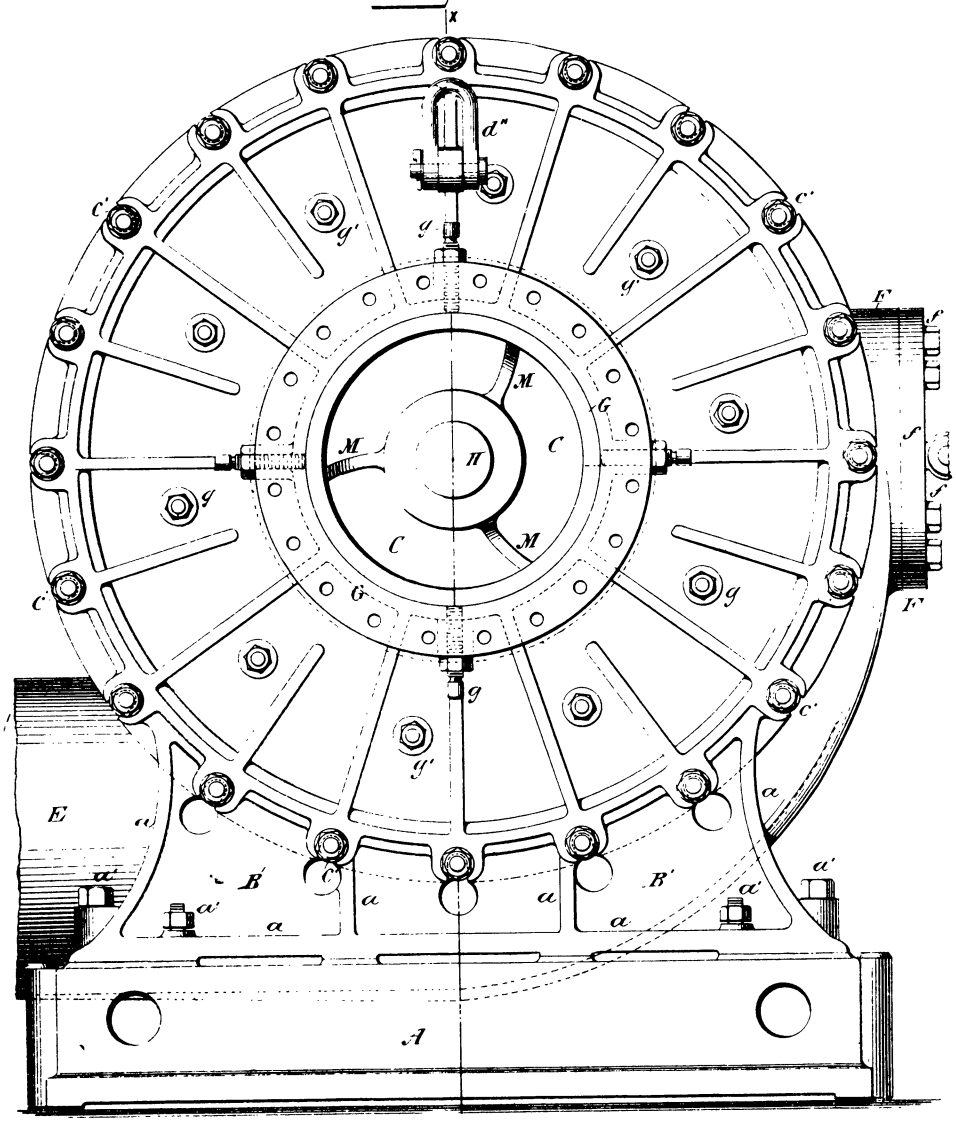

VIEW OF SUCTION END OF PUMPS.

Fig. 3.

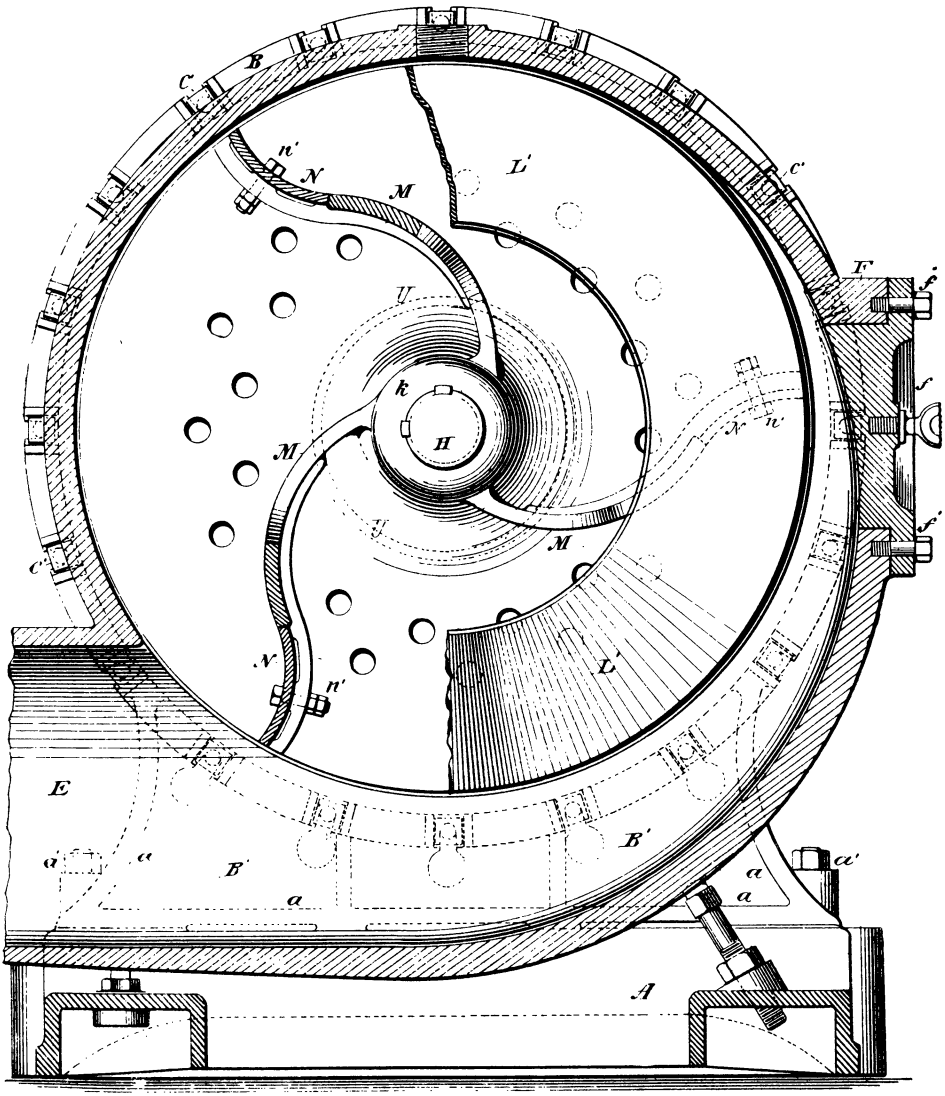

INTERIOR VIEW OF THE PUMP, SHOWING DETACHABLE PLATES IN PLACE.

Fig. 6.

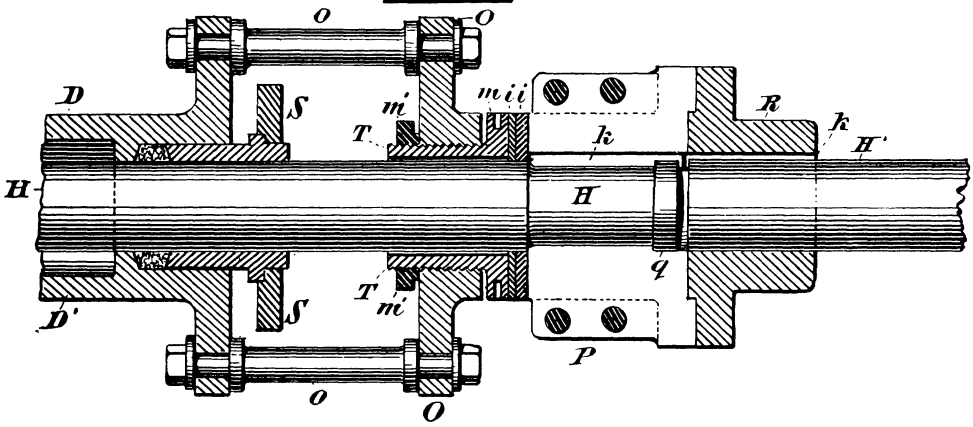

Fig. 7.

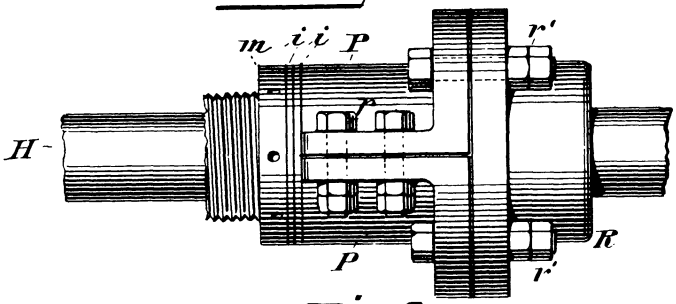

Fig. 8.

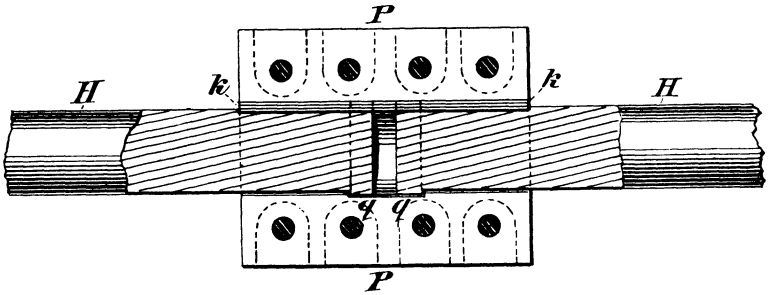

Fig. 9.

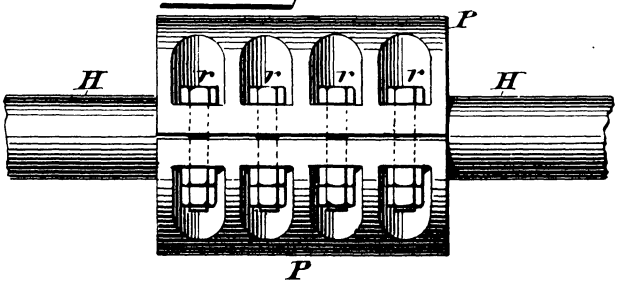

threaded sleeve (T T) also provides for longitudinally adjusting the rotating parts of the pump within its shell whenever required.

(4), To prevent more serious damage by breakage of more expensive parts of the pump, the permanent wings (M M), instead of extending from the hub (k' k') to the shell (B B), extend about two-thirds of this distance. To these permanent wings are bolted what may be termed extension or false wings (N), made light and of wrought and easily bent metal, yet sufficiently strong for the work being done. These are fastened to the permanent wings, each with two bolts, one at each end, having their bolt-holes slotted out to the ends thereof, as shown by figure 5, page 43.

By this arrangement, unusual resistant objects, as lumps of iron, etc., being thrown, by centrifugal force to the outer ends of the wings, exert their violence against these false detachable wings, bend and carry them away, by drawing them from their bolt-fastenings, and thereby preventing greater damage to more costly parts of the pump—these false wings being inexpensive and quickly replaced.

(5). To protect the heads of the pump from rapid cutting action of the sand, they are provided with less expensive internal facings.

To facilitate the examination of the condition of the interior of the pump, replace the detachable wings, and readily make other repairs, the shell is provided with a man-hole, (F F, page 44).

Special Features of the Drags and Suction Pipes and their Connection with the Pumps and Ships.

The illustration, page 48, represents a side view of a portion of the dredging steamer *Reliance*, showing the suction pipe and drag in position while dredging, also (in dotted lines) the same hoisted out of the water alongside of the dredge, in the position it occupies when the steamer is not at work, and when going to and returning from the dumping ground. B. shows the relative position of the flexible rubber section of the suction pipe, as supported by hoisting and strain purchases in general.

An enlarged view of the flexible rubber section of the suction pipe is shown by the several illustrations on page 48, and which so clearly show its construction and connection with the other portions of the suction pipe that no further explanation of its details need to be here given ; except to call attention to the manner by which it is supported and protected from short bends by the peculiar arrangement of the suspending

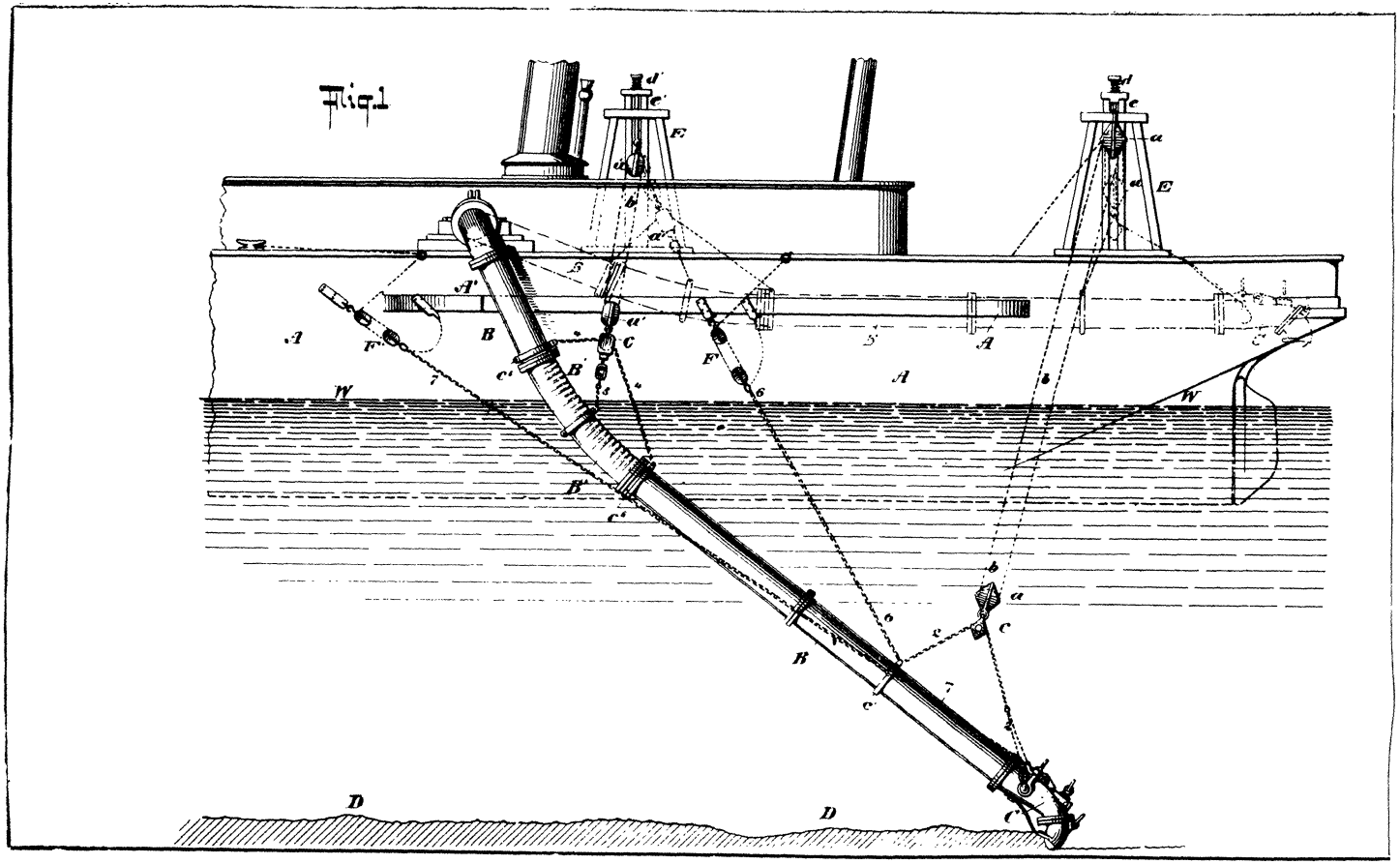

SIDE VIEW OF STEAMER DREDGE, SHOWING THE POSITION OF THE SUCTION PIPE ON THE WORK—B' BEING THE FLEXIBLE SECTION.

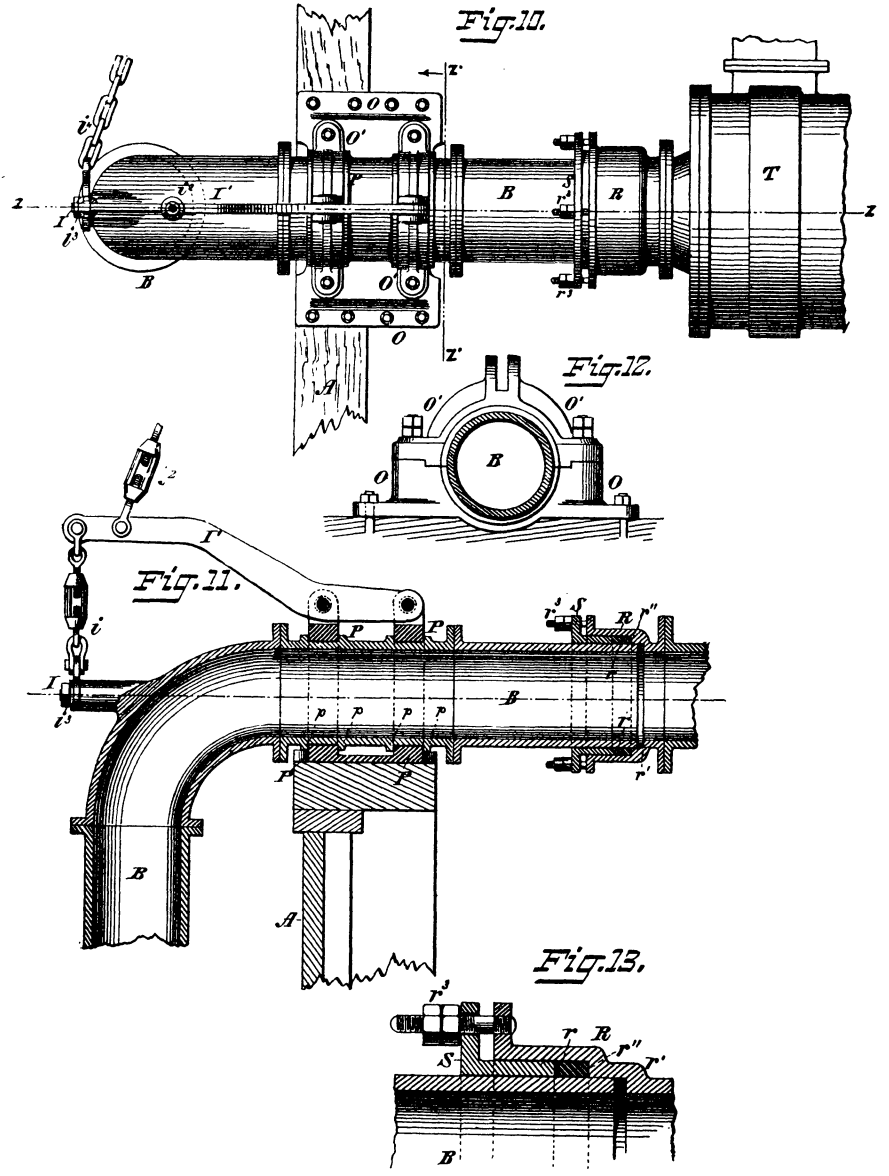

VIEW OF TRANSVERSE SECTION OF SUCTION PIPE AND ITS CONNECTION WITH THE PUMP AND WITH THE RAIL OF THE SHIP.

Fig. 4.

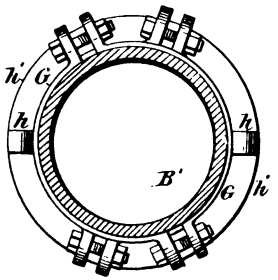

Fig. 5.

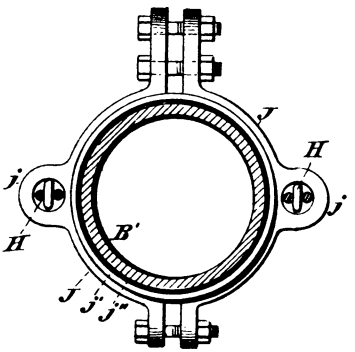

Fig. 6.

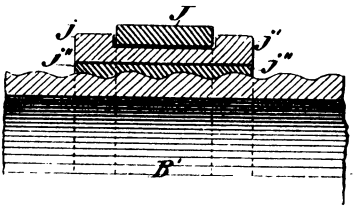

Fig. 3.

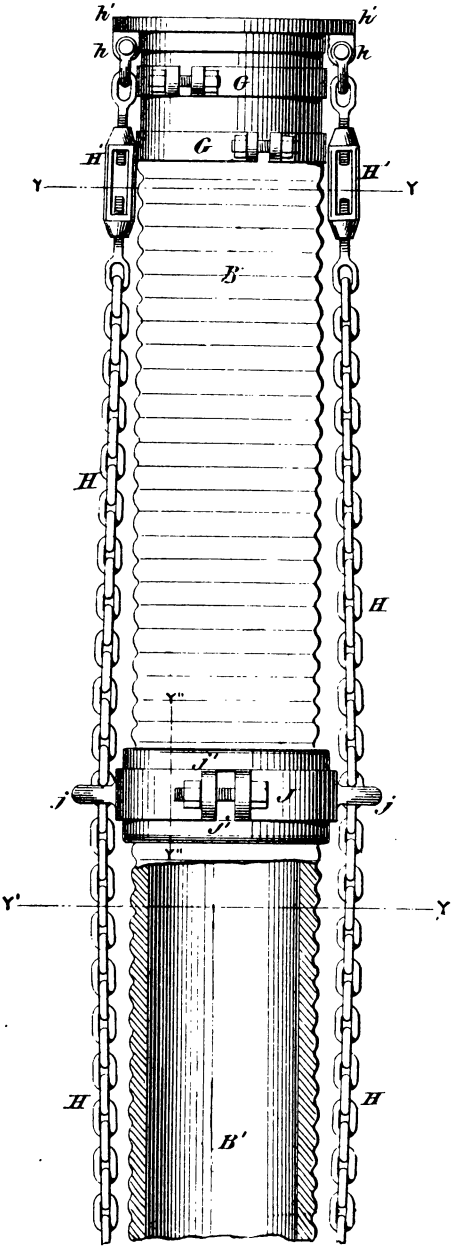

DETAIL VIEWS OF THE FLEXIBLE RUBBER SECTION OF THE SUCTION PIPE.

chains 4 and 5, and travelling block 2, and the additional provision against longitudinal tension by the holding chain 7, one end of which connects with the drag and the other end with the side of the ship—see page 46.

An enlarged view is shown on page 49 of the right angle bend, swivel rail pipe and stuffing box (in plan and section, with enlarged section of the stuffing box) forming the transverse portion of the suction pipe, and its connection with the pump and ship.

Fig. 10 is a plan view of the swivel rail pipe and stuffing-box—the rail pipe being in its rail-box or bearing O O, and having two caps, O′O′, as shown in Fig. 12. The peculiarity of this box, O O, is that it provides two separate bearings, P and P, located some distance apart and in recesses pp and pp formed on the suction-pipe by raised shoulders. The object of these two narrow bearings instead of one broad bearing is to avoid cramping of the pipe in the said box when laterally strained by the rolling of the ship, thus allowing the pipe to swivel easily while the drag is being drawn along the bottom in connection with the material to be raised, when, at the same time, the ship may be raising and lowering by the roughness of the sea. It also gives stiff support to the suction pipe on the side of the ship; also furnishes two sets of shoulders on the pipe as an extra longitudinal support or hold on the said pipe. Another peculiarity of this box is that the cap is made in two separate parts to make it possible to repair or renew the said caps without stopping work, by removing but one of the same at a time.

Figs. 11 and 13 illustrate the method of attaching the suction-pipe B by stuffing box R to the pump. R is a section of this connection. At one end it has a flange and opening that correspond with the same on the pump T, and which at the other end is enlarged and within has two shoulders r′ and r″, and surrounds the inner end of the connecting suction-pipe—the extreme end of which enters the smaller diameter of the section R, formed by the shoulder r′. Between the larger diameter of the said section R and the said pipe B is provided the gland S between which and the shoulder r″, is the packing space which is filled with soft packing material r r, and which is compacted around the said suction-pipe between the end of the said gland and the shoulder r″ by means of the bolts and nuts r 3 (best seen in Fig. 13). By this means is provided a long rotating union between the suction-pipe and the pump, making a stiff and firm connection for the said suction-pipe against the straining action produced by the rolling of the ship in deep and rough water.

To further support the elbow of the suction-pipe and so relieve the lateral strain thereof on its rail pipe bearing in the side of the ship and its attachment to the pump and, thereby, to allow the same to more easily rotate is provided a lug, I, Figs. 10 and 11, on the rotating center of the

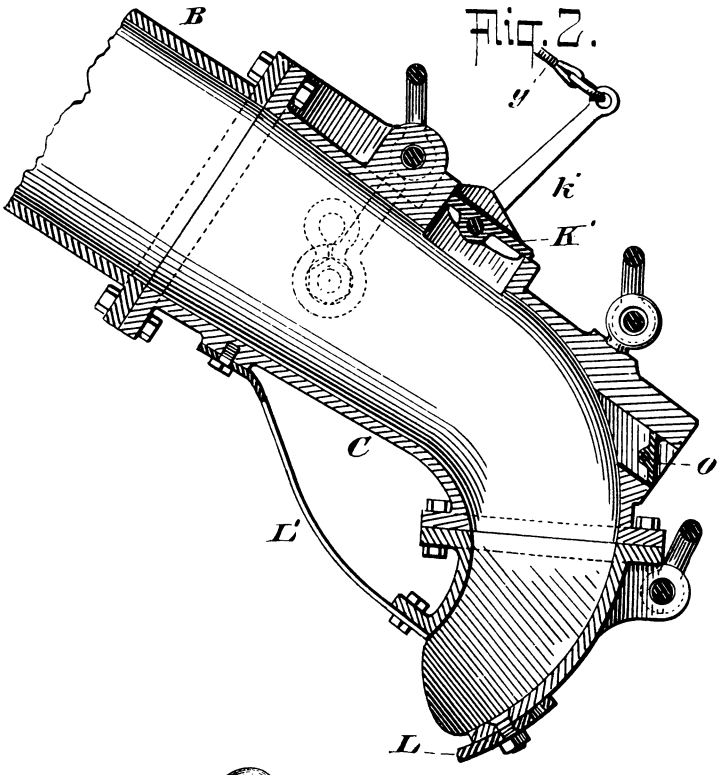
B
Fig. 2.
y
k
K'
C
o
L'
L

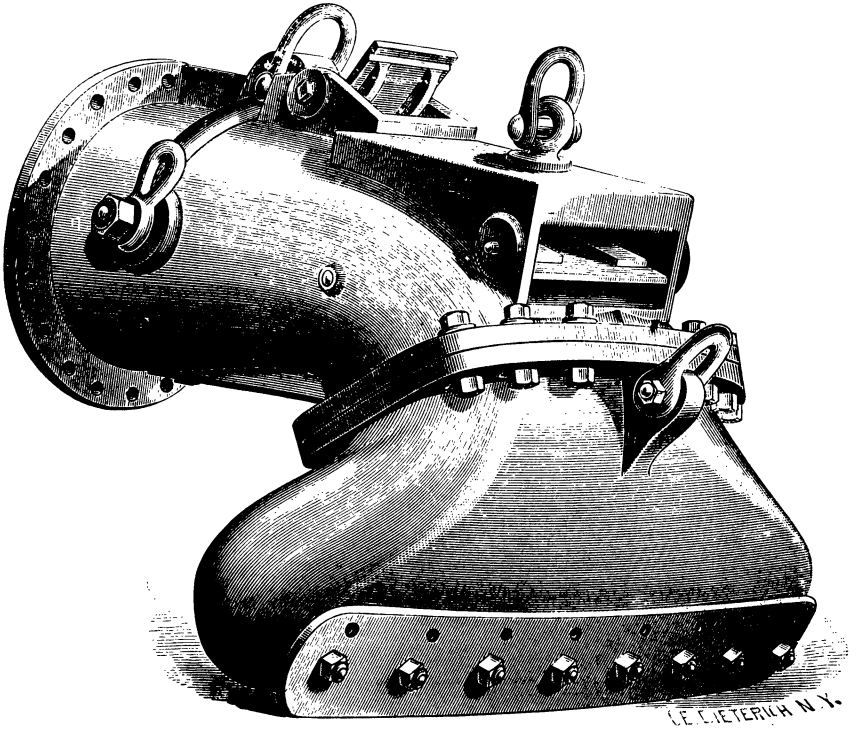
C. E. CIETERICH N.Y.

said elbow and vertically over it a goose-neck I′, secured to the said bearings, one of which is shown transversely by Fig. 11. Between the said lug and the outer end of the said goose-neck is provided a turnbuckle i to vertically adjust the support of the former by the latter, and to hold the said elbow from horizontal back strain is provided a holding chain i 4 Fig. 10, in front of the elbow. To assist in supporting said goose-neck is provided a turnbuckle i 2, Fig. 11, to connect with a chain which attaches to the ship.

It is evident that the suction pipes, one on each side of the ship, which are about 60 feet long, descending from the ship at an angle of some forty-five degrees with the horizon, and large and heavy, besides being filled (when at work) with sand and water are necessarily subjected to being strained or broken in any of its parts by the rolling and pitching of the vessel, which often occurs in what is termed "outside work" or in unprotected localities. The object of these improvements is to so attach the suction pipes and provide such means of hoisting and lowering the same and adjusting them to their work, and to have such complete control over them as to not only keep them steadily at work, but, as far as possible, to protect them from damage liable to occur from the unsteady movements of the ship and other causes of injury thereto.

An enlarged view of the drag is shown on page 52. Its lower end is broadened out, as shown, and bent downward and forward so as to bring its mouth L in front to cover as much bottom or cutting surface as the area of the suction pipe will allow—L′ being a shield to prevent the bend or hook of the drag from sinking too deep into the dredged material, and also to enable it to ride over any unyielding obstruction which it might encounter when at work.

O is an opening, provided with a door for admitting water to mix with the sand or mud to make them mobile, and so prevent the pump from choking. This door is always more or less open and adjusted to let in more or less water, as may be required by the quality of the material to be dredged. In dredging soft mud this door sometimes will not admit sufficient water to prevent the choking of the dredging pump; hence is provided the relief door K′, which is to be opened only when some part of the passage from the mouth of the drag to the pump becomes obstructed, and as soon as the obstruction is removed, is again allowed to close. This relief door is opened at will by means of the rope y extending from the lever k′ to the deck of the ship.

Reasons why the Swash Channel of New York Harbor Should be Improved.

As the Improvement of New York Harbor, by widening and deepening Gedney's and Main Ship Channels, has been successfully accomplished, and at an expense to the Government not exceeding 23½ per cent. of the originally estimated cost, and as the Improvement of these channels is proven to be permanent, more and better reasons than before now present themselves to show why the Swash Channel also should be improved.

FACILITY WITH WHICH THE SWASH CHANNEL COULD BE IMPROVED.—The foregoing account of the Improvement of the Main Ship and Gedney's Channels demonstrates beyond all question the practicability and feasibility of a timely and successful improvement of the Swash Channel, should the Government conclude to have it done.

The successful and satisfactory Improvement, by dredging, of the Main Ship and Gedney's Channels, even without the advantage of experience on the part of the contractors, and at a cost, as before stated, not to exceed 23.5 per cent. of the amount first estimated by the Government Engineers, proves to a certainty that, by similar means, the Swash Channel can be as successfully, satisfactorily and economically improved, and with greater benefit to navigation.

CERTAINTY OF THE PERMANENCY OF ITS IMPROVEMENT.

As the first appropriation ($200,000) was made for the Improvement of the bar lying in Gedney's Channel, dredging was first begun in that channel as the test of efficiency of this kind of work upon a sea-bar.

Careful comparative surveys made to determine the question of permanency showed that so far as the work had been done, the depth of the channel was fully maintained, whereupon dredging was continued. Other surveys for the same purpose, from time to time were made, and which further confirmed the same satisfactory results. And so the dredging went on until the Improvement was completed, wholly by dredging.

In every instance test surveys show that the attained depths of the channels are fully maintained, and in some places more than maintained, to the extent of several inches.

Therefore, the question of permanency of the work by dredging is established as regards the Main Ship and Gedney's Channels.

Hence it is safe to conclude that the Swash Channel, were it similarly improved by the same means, would also maintain its depth and width. Besides, there are other reasons to confirm this conclusion :

First. The Swash is not exposed to sedimentary deposits from the Raritan Bay, as is the lower portion of the Main Ship Channel.

Second.—It is a shorter channel-distance from the upper part of the Main Ship Channel to the ocean, and, therefore, would be more likely to be scoured by the water from the Narrows, by way of the upper part of the Main Ship Channel, than would be the lower section of the latter channel.

Third. It is a more direct course between the upper part of the Main Ship and the Gedney's Channels, than is the Main Ship from its upper union with the Swash to the Gedney's Channel.

Fourth. Surveys of the various channels from as far back as 1835 show that the Swash is in as good condition as it was 56 years ago.

Fifth. The velocity of the flow of water through the Swash is twice as rapid as it is in the Main Ship Channel on the Knolls, and its flow is nearly parallel with its axis, and the same is true of the Gedney's Channel ; which also facilitates navigation, while part of the tide crosses the axis of the Main Ship Channel. Besides, the rate of flow in the Swash and Gedney's Channel is the same.

In conformation of these statements, the following is taken from Col. McFarland's report for 1886 :

" A comparison of the survey made by Col. G. L. Gillespie, Corps of Engineers, in 1884 (see Annual Report of the Chief of Engineers for 1885, pages 776 to 785), with those previously made, shows that the changes which have occurred in the channels since 1835 have been very slight.

" The 24-foot curves of the Main, Swash, East and Fourteen Foot channels have all moved slightly westward and southward, but still embrace about the same areas of shoals.

" But while, in 1835, bars with less than 24 feet on them extended completely across Gedney's, the Main Ship, and the Swash Channels, these bars, at the time of Colonel Gillespie's survey in 1884 had nearly disappeared, leaving in each case only spots where there was less than 24 feet of water.

"For fifty years, then, it will be seen that the natural tidal scour, which is strong enough at the Narrows to maintain a channel a mile wide, with depths of 100 feet in it, has been only able below the Narrows to maintain a 30-foot channel, with two spots in it where there is 24 feet depth.

"From current observations taken by Colonel Gillespie in 1884, it appears that a good deal of the ebb volume from the Narrows passes to the northward of the south side of the Swash Channel, and that a large part of the Raritan Bay ebb volume passes between the south side of the Knolls and Sandy Hook, leaving a wedge-shaped area at their junction near the Knolls, over which the rate of the current is reduced about one-half, and where a part of the current passes directly across the channel instead of along its axis."

"This is also true of the flood-tide; on the flood there is the same diminution of rate across this area, and a part of the tide crosses the channel at right angles. Some of the velocities observed by Colonel Gillespie, in 1884, in these channels, are as follows:

LOCALITIES.	Maximum Ebb, Miles per Hour.	Maximum Flood, Miles per Hour.
In the Swash Channel, abreast of the Roeomer Beacon	1.60	1.21
In Main Ship Channel on the Knolls	0.80	0.65
Close off the point of Sandy Hook, and due North of it	2,22	1.70 to 1.20
In the deep hole, half way between Sandy Hook and Gedney's	2.00	1.50
In Gedney's Channel	1.60	1.30

"Both in the Swash and in Gedney's Channel the ebb current is nearly parallel with the axis of the channels, and from the measurements so far taken the relative ebb velocities in both channels appear to be the same, but the flood in Gedney's Channel appears to exceed that of the Swash Channel by 0.09 miles per hour.

"In the spring of 1872 Brig.-Gen. (then Lieut.-Col.) John Newton, Corps of Engineers, had a series of current observations taken in the Lower Bay, with the following results:

PLACE.	Surface Velocity, in Miles per Hour.	Bottom Velocity, in Miles per Hour.
Fourteen Foot Channel	2.20	0.40
East Channel	1.65	0.90
Swash Channel	2.00	0.40
Main Channel, close to and North of the point of Sandy Hook	2.40	0.80

These observations were stated to have been taken at the maximum velocity of the ebb tide.

From these tables of velocity of currents, it is seen that the flow is more rapid in the Fourteen Foot than in the Swash Channel, and a hundred per cent. greater in the Swash than in the Main Ship Channel, showing the tendency of the water to take the course of the shortest distance from the upper part of the Main Ship Channel to the Ocean.

Advantages of its Position and Direction.

The question of improving the Swash Channel does not imply the substitution of the Swash for the Main Ship Channel, for were the former channel improved and employed, both ends of the latter channel would still be used in conjunction with the Swash Channel.

Considering the Main Ship and the Gedney's Channels, as now improved, to be one and the same channel extending from the Narrows to deep water of the Ocean, it will be seen that while its course from the Narrows to Flynn's Knoll is direct, and not seriously indirect from Flynn's Knoll to the Ocean, that yet its course from the Narrows to the Ocean is very disadvantageously indirect.

By referring to the map, page 9, it will be seen as Col. McFarland says, in his report for 1886, that:

"The Swash Channel is really a cut-off from the Main Ship Channel, leaving it about six miles below the Narrows, and joining it again at the eastern end of Gedney's Channel.

"The distance from the Narrows to 30-feet soundings outside the Bar by the Main Ship Channel is 15 miles, and by the Swash Channel 11 miles."

Hence from the Narrows to the Ocean the distance is four miles less by way of the Swash than by the Main Ship Channel.

The directions of the Beacon ranges of these two channels, according to the Government Chart, show that the deviation of the Swash Channel from the course of the Main Ship Channel, at their upper union, is 54 degrees; and at their lower union the deviation of the Swash from the course of the Main Ship Channel is 61 degrees; the sum of these two angles being 115 degrees.

While the two angles formed by the Beacon ranges in their courses around Flynn's Knoll is also 115 degrees, being 50 degrees and 65 degrees, respectively. Hence from the Narrows to the inner mouth of Gedney's Channel, the amount of deviation of the Beacon ranges from a

straight course is the same, and the number of angles or turns is the same, by way of both channels. And there is not a great difference between the magnitude of the several angles, the greatest being 65 degrees, and the least being 50 degrees, both in the Main Ship Channel.

Col. McFarland, referring to these angles, in his report for 1886, says:

"At the lower end of the Swash Channel it is necessary to make quite a sharp turn to the northward in order to get into the Gedney's Channel, and the turn from the Main Ship Channel into the Gedney's Channel is even shorter. More room should be given for vessels at these points."

ECONOMICAL ADVANTAGES OF THE SWASH OVER THE SHORT-BEND SECTION OF THE MAIN SHIP CHANNEL.

Though the items of extra fuel and time, required by the indirection of the course of, and greater distance by the Main Ship Channel, may be considered of small account, nevertheless, in view of the increasing number of larger ocean steamers navigating these channels, and the interest felt in saving time, especially with that class of steamers that are now obliged to employ the Main Ship Channel, they are not to be overlooked.

The saving on these two items of fuel and time, to say nothing of other advantages, would aggregate a sum in course of time sufficient to pay the cost of amplifying the Swash Channel to a width of a 1,000 feet, and a depth of 30 feet at mean low water.

An evidence of the advantages of the Swash over the Main Ship Channel, is the fact that it is employed by nearly all, if not all, navigators who are not compelled to take the Main Ship Channel because of the great draught of their vessels.

The Necessity of Improving the Swash Channel.

Considering the extent of ocean traffic and travel, and its rapid increase, it would seem, for convenience and safety, that that portion of the Main Ship Channel which turns upon itself to the extent of 115 degrees around Flynn's Knoll should be relieved of a portion, if not all, of the larger ocean vessels; not only because of the greater distance, inconvenience, expense, loss of time and danger attendant upon its navigation, but because of its less capacity than would be that of the improved Swash Channel. The great length and draught of many steamers require so

large a turning area, that in doubling Flynn's Knoll, or following any short turns of the channels, they are liable to swerve from one side of the channel to the other, causing increased liability of collision and grounding, as well as diminishing the capacity of the channel.

In short, the relative safety and capacity of, and the convenience and speed of passage through a channel of given width and depth, are commensurate with its straightness and inversely with its length.

Besides, the current in the Swash Channel runs in line with its axis, while in that portion of the Main Ship Channel lying north and south, the current is transverse to the axis of the channel, which diminishes the facility of its navigation.

Again, as the great majority of vessels entering and leaving the port pass through the Swash Channel, and as in passing out of this channel, at either end, their course is in a direction diagonal to the axis of the Main Ship Channel and therefore, to the course of the larger ocean steamers in their passage through the latter channel, it is evident that this is a source of liability of collision that would be obviated if all vessels were running in the same general direction.

Why the Main Ship Channel has been Employed by the Large Steamers, and Their Effect on the Channel.

The Main Ship Channel being a trifle deeper, as well as some wider, than the Swash Channel, it had been employed by the larger steamers, and the use of it by these deep draught vessels had the effect to keep it open and increase its depth. But as the current in the Swash is twice as rapid as in the Main Ship Channel, and in line with, instead of across its axis, as well as the distance being 4 miles shorter; therefore, had the bed of the Swash been disturbed and stirred up by the same vessels as had been the bed of the Main Ship Channel, it is not certain that the depth of the Swash would not be equal to that of the Main Ship Channel before its recent improvement.

Relating to the effect of steamers in deepening the channels, Col. McFarland, in his report of 1886, says:

"It is common to see vessels passing over the bar with a wake 500 to a 1,000 feet long behind them of material churned up from the bottom by their propeller blades."

And in his report for 1885, Col. Gillespie says:

"The change in the character and draught of the vessels using the harbor during the past thirty years, particularly in the last ten years, has had its influence, no doubt, in slightly increasing the depth from 21 to 24 feet on the bar."

WHY THE SWASH CHANNEL WAS NOT IMPROVED INSTEAD OF THE SHORT-BEND SECTION OF THE MAIN SHIP CHANNEL.

Why the Main Ship Channel between the upper and lower ends of the Swash, instead of the Swash Channel itself, was improved may have been, presumably, for the reasons that:

At the time the Government concluded to improve New York Harbor its Engineers were not clear as to the best project to present or the best course to pursue, not knowing, without trial, what would be the result of dredging as to permanency; therefore, they felt their way, step by step, by dredging; believing at the start that contraction would be required at last for improving Gedney's Channel, and that the result of that part of the work which was to be done by dredging would be better maintained in the Main Ship than in the Swash Channel.

Had the Engineers known at the outset that the entire work would be done by dredging alone, and had they then known, as they now do, that the results of dredging would be successful and permanent, possibly they might have concluded that the Swash was the preferable channel to improve.

As the method of improving New York Harbor, was, therefore, at first a subject of opinion and probabilities rather than of experience and demonstration, it seemed a less experimental course to improve the Main Ship rather than the Swash Channel; but the project of improving this channel can now be viewed in the light of facts and experience which did not exist previous to the improvement of the Main Ship and Gedney's Channels.

EXPLANATION OF PLATES.

The folowing Plates are illustrative of the dredging steamer *Reliance :*

PLATE I.—Sheer plan of the steamer, showing arrangement of drags and suction pipes.

PLATE II.—Longitudinal section of the steamer, showing arrangement of boilers, propelling engines, main pumping engines, dredging pumps and auxiliary pumps, and hoisting machinery and appliances for operating drags and suction pipe.

PLATE III.—General plan of the steamer, showing most of the more important parts, which are designated on the Plate by name.

PLATE IV.—Cross sections of steamer between propeller engines and boilers, looking forward and aft.

PLATE V.—General plan of dump screws, used in connection with the dredging steamer *Mount Waldo.*

Oversized Foldout

Oversized Foldout

Oversized Foldout

PLATE. IV.

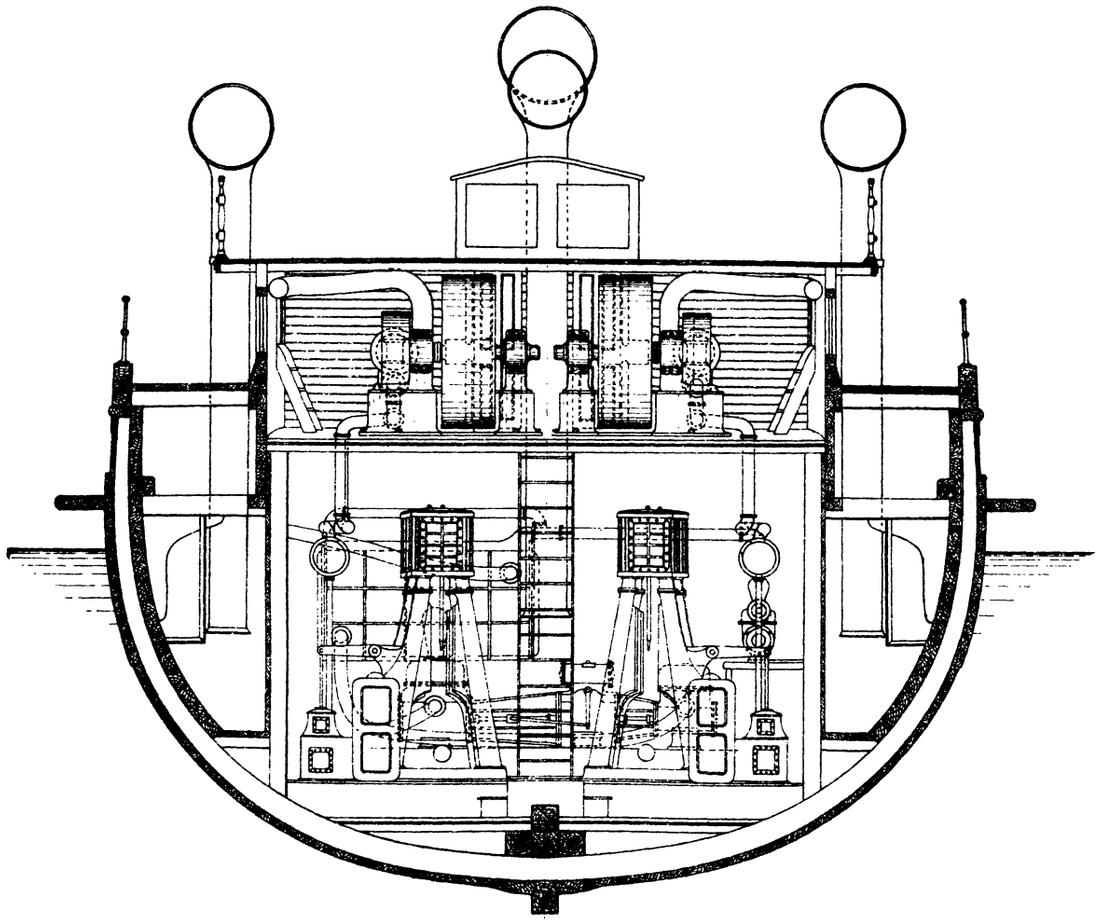

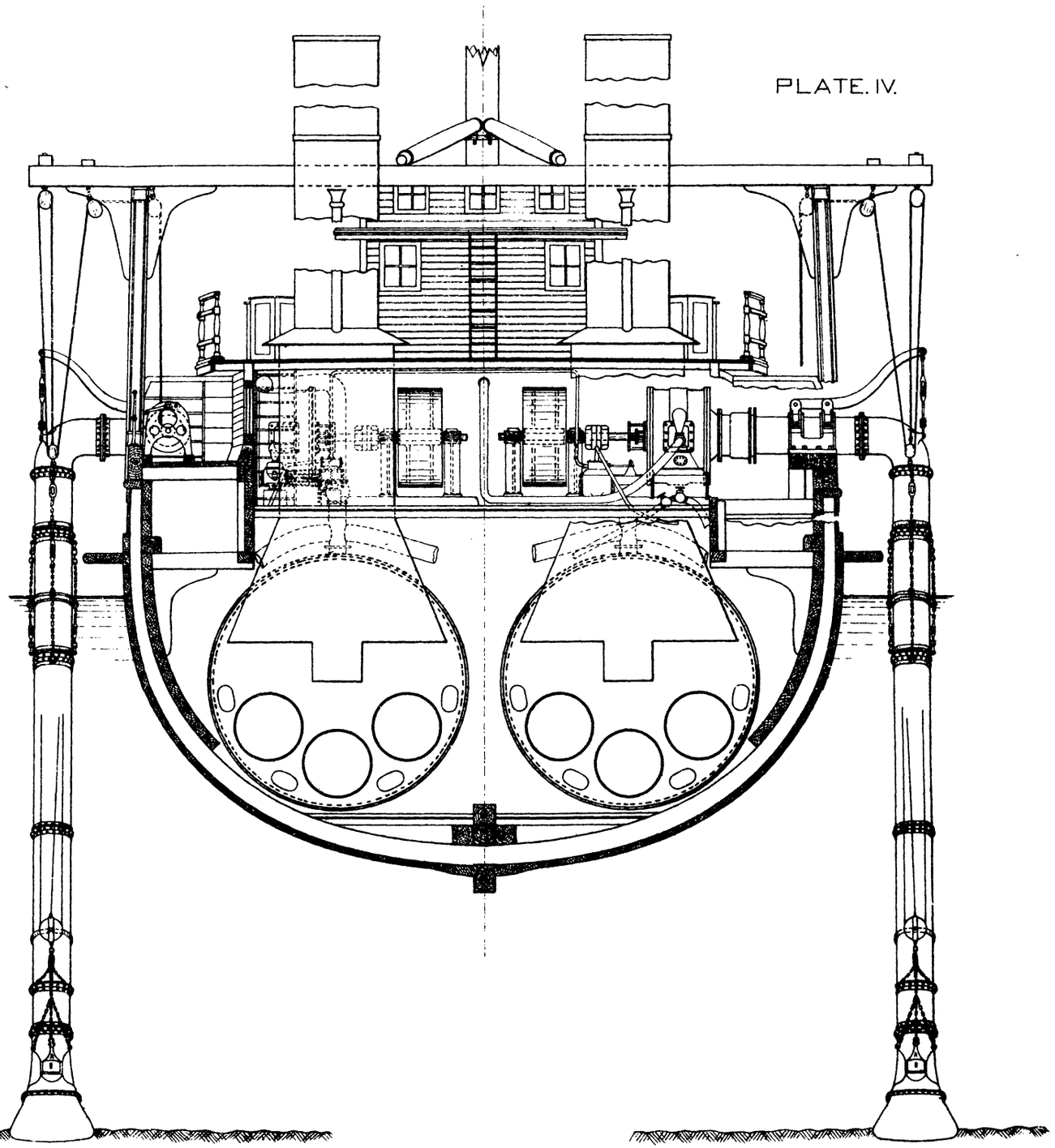

Oversized Foldout

UNIVERSITY OF MICHIGAN
3 9015 00210 7210

Date Du